UNIVERSITAT POLITÈCNICA DE CATALUNYA
BARCELONATECH
Escola Superior d'Enginyeries Industrial, Aeroespacial i Audiovisual de Terrassa

ESEIAAT

Degree in Mechanical Engineering

Study of design and calculation of the structure of a house in the municipality of Sant Cugat del Valles.

Report

Author: Rubén Extremera Hidalgo
Tutor: Montserrat Sánchez Romero
Terrassa, January 10, 2019

Acknowledgements:

Family

Close friends

Ricard Neira, Xavier Alonso and Amador Sillero – Transformados Metálicos SA

Index

Index of illustrations

Table index

1. Introduction

1.1 Objectives

The objective of this project is to calculate and design the metallic structure of a house in Sant Cugat del Vallès.

1.2 Scope of the project

The scope of the project will be delimited by the ending of the design of the metallic structure, as well as its calculation and its assembly on the specific place. No previous land studies nor studies of the subsequent facilities will be contemplated.

1.3 Specifications

- As it is a metallic structure, the European UNE EN-1090 regulations for metallic structures must be followed.

- The structure must be able to resist the cutting, axial and bending efforts that will be generated by the charges applied to it, hence assuring the security of the people living within it before any given circumstance.

- There are three different regulations regarding the implementation of metallic structures: EN1993, CTE DB SE-A and EAE.

- The structure must be viable both in its construction and assembling.

2. Project justification

This project is motivated by my current work. As a project manager, I can dedicate myself to analyze the structures that we carry out.

Now with this project I can put more emphasis on my work and not only perform a brief analysis of the structure, but also focus on its calculation, hence being able to select profiles in detail through a calculation software and doing the desing of the structure with a designer partner as well.

2.1 Transmetal

TRANSMETAL (Transformados Metálicos, SA) was born in 1995. It is focused on the manufacturing of the structures, as well as on metallic profiles formed in cold. It is mostly adressed to the building industry. Nowadays, the company consists of 3 departments: metallic structures, facade and roof.

Illustration 1 – TRANSMETAL [1]

At present, the facilities are situated in Lliçà de Vall (Barcelona), and it has de CE certification available for the constructuion of metallic structures by Bureau Veritas (2014), which can be required since the 1st of July, 2014 for all the metallic constructions. We also have a Quality Management system, according to ISO 9001:2008 regulation, by Aliter Qualitas.

Illustration 2 – CE [1]

Illustration 3 - Aliter Qualitas [1]

It is also important to mention that the company obtained the CONSTRUMAT award to edification for the technologic innovation, thanks to the construction of the Industrial Unit of Simon SA in Olot (Girona).

TRANSMETAL is associated to ASCEM (Association for the construction of metallic structures) and ACE (Association of constructure consultants). In addition, it is a company adherent to Colegio de Ingenieros Industriales de Cataluña. This close collaboration with these organizations, allows us to stay informed of any aspect that affects our work and it is an idea exchange forum, which makes it much more valuable.

Illustration 4 – ASCEM [1]

3. State of the art

3.1 Metallic structures

The world of the metallic structure is complex and modern. Not only do we not know the involved number of difficulties, but we also do not know the number of advantages that this method entails either.

3.1.1 Initation

If we take a look back in history, we will realice that humans have always built their homes in places that have proven to shelter them from heat, cold and floods.

The main resources for these constructions consisted on the main materials of the given time, as profiles laminated in steel had not beed yet discovered nor they would come to think that anything like this would ever happen.

Masonry is part of the most primitive resources in the history of human constructions. It is known that around 7500 AD constructions involving the use of bricks already existet in Mesopotamia.

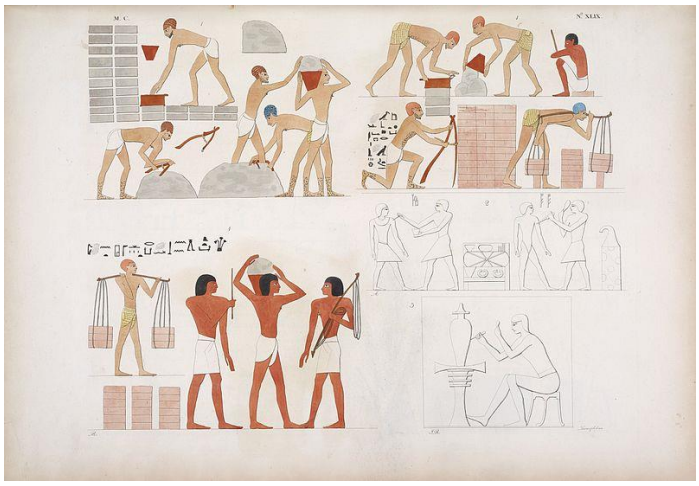

Illustration 5 - Brick manufacturing in ancient Egypt [2]

The first people to use it for construction purposes were the pre-ceramic Neolithic farmers, a time where all constructions were made of wood and stone.

The vast majority of current buildings follow the same pattern, but thanks to technology those same buildings can be created again but being more slender and resistant.

Following this introduction, I will make a list of advantages and disadvantages regarding the construction with metallic structures in comparison to the more traditional method envolving concrete.

3.1.2 Advantages

- Homogeneity of materials.
- Quick assembling.
- The possibility of forming previously assembled assemblings in a workshop, reducing the amount of assembling on site.
- Lower cost of foundations due to the manufacture of lighter structures.
- The possibility of manufacturing a structure that can be dismantled, reused or recycled assumes a significant saving of the investment by allowing it to be disassembled.
- Materials are of great resistance. It is not necessary to reach the large dimensions needed with concrete to obtain an adequate strength to resist the requested efforts.
- The use of ductile materials facilitates the detection of an error or an overload prior to the possible failure of the system.

3.1.3 Disadvantages

- Its economic cost. Not only the structure but also the subsequent operations suppose an increase in the final price.
- Ignifugation is almost mandatory as in case of fire a collapse can be caused. Being a material that absorbs temperature, its resistance will be reduced. In some cases, it can become a mandatory task.
- Corrosion. Steel does not have a great resistance to corrosion and, in humid and/or marine environments, special care must be taken.
- Buckling. All slender elements suffer from it. Although the calculation already contemplates it, a maximum of arrow per piece length must be set.

3.2 Joints

On the one hand, joints are the main feature that act as a differentiation in a metallic structure with the concrete ones, since one of its main characteristics is the absence of variants regarding joints.

On the other hand, unions are one of the most conflicting parts in the world of metallic structures, making it necessary to carefully study all of them in the projects.

There is more than one type of union, and a structural set may have more than one type.

Over the years there has been a historical evolution, with different trends when it comes to solving the joints, marked in an important way since steel was first used in 1856 in metallic structures.

Due to the risk we assume when making unions we try to generate the minimum of them, in addition to being able to represent up to 40% of the cost of a structure.

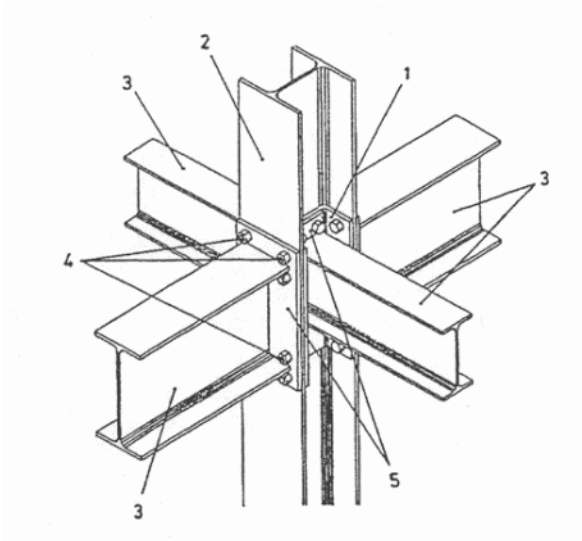

Illustration 6 – Joint [3]

As I have said before, it is not necessary to use the same type of union in the same set, but if we want to reduce costs, we should try to typify the unions in different places. Some unions appear more important than others within the structure, depending on the level of importance of the piece to be fixed, such as in the case of a beam-pillar joint, where we must take into consideration more than one important factor in order to choose the correct type of union.

All this amount of costs that can be generated by unions should be taken into consideration in the initial proposal since a union is not accounted for by the material contributed, which comes to be minimum in consideration with the structure. However, what will be regarded with more detail is more the number of hours that the construction will involve and what ranks of operators will be needed to perform that specific union.

The realization of the union in the workshop will always be facilitated as much as possible. We will go to the work if the worker has a good access to the deposition of materials by facilitating the correct position or allowing mobility for the placement of bolts, thus reducing the cost of the total calculation of manufacture of assembling hours.

On the following part I will offer several of the options for a union that have appeared over the years.

3.2.1 Rivets

The first joining method was the rivet, which has good characteristics when it comes to solving the compression and shear stresses. At the moment it is a technique found in disuse, although we have good examples of this type of union, in characteristic buildings such as The France Station (Barcelona), The Eiffel Tower (France) or even parts of our ESEIAAT Centre.

Illustration 7 - Rivets Eiffel Tower [4]

There are different types of materials for these elements, being steel the most characteristic, but also being possible to manufacture in aluminium, copper, etc.

The current union which shares the most similarities would be the screw but without a thread, differing greatly by the method to carry out the union.

3.2.1.1 Process

The spike of the rivet is introduced into the previously made hole. Once the head of the rivet is in contact with the base of the piece to be joined with, the opposite end is heated up to high temperatures between 950°C and 1050°C.

Now in that temperature range the steel can be easily molded. The molding of the end is started also by doing the same way as the main head once the desired shape is achieved. It should be appreciated by the colour of the material that the temperature is not higher at around 700°C, so it will keep the form done.

3.2.1.2 Present

Currently, this operation has been exempt from use to fix metallic components due to the inconveniences that it presents, such as: poor use of the material requesting the components to traction, poor distribution of tensions in the area of action and especially for the poor security in the joints.

It may happen that a rivet is not completely fixed to the components and then impossible to calculate accurately in the joints.

3.2.2 Screws

After riveting, a new method with an improvement appeared, now these unions could be dismantled. We are talking about the union with screws.

With this improvement, we can proceed with greater speed to the execution of the unions.

In this type of joints, a base is necessary to prevent the penetration of the bolt in the hole. In this case, we use washers to avoid additional stresses in the most conflictive areas.

There are several types of screws and washers, all have their specific function:

Illustration 8 - Joint by screws [5]

Security washers: When the efforts are also dynamic.

- Calibrated screws: All those joints with dimensional tolerances, adjustments H11/h11.
- Black screws: Does not specify the surface coating that incorporates. It can be galvanized, stainless, etc. They only indicate that the level of adjustment is not necessary like with the calibrated screw

3.2.2.1 High resistence screws

This type of screws are tightened at high pressure to exert a severe friction reaction, so they take advantage of this reaction to transmit stresses on the contact surfaces and reduce the efforts in the joint.

These unions will work with a lock nut or with a direct thread. All of them also have flat washers under the head, and also in the nut.

3.2.3 Welding

In 1910 a great disruption in the world of metal structure was created with a new way of fixing joints.

Welding is a new technique that, by means of electrical intensity and a filler material, melts both parts to fix the joint in an established position.

Illustration 9 - Joint by welding [6]

The filler material is supplied through the coated electrodes. The coating of these electrodes creates an inert atmosphere to avoid inclusions of other particles inside the weld.

It has a wide range of advantages, one of the most important is the best tension distribution, using the entire base to make the union.

Thanks to this type of union we can get to make lighter structures, being homogeneous and continuous in some cases.

All these advantages also have a series of disadvantages such as breakage due to fatigue and fragile breaking. These types of breaks occour due to the dynamic loads and internal stresses that we generate when creating a hardening at the time of welding.

And, in addition, one of the biggest disadvantages from the economic point of view regardind the assembling is that specialized and qualified personnel is required for this type of union. In addition to greater difficulties at the time of realization, the structure is examined with more rigorous inspections in some occasions.

The union does not have to cause more difficulties than the ones it causes by itself, so we have to adapt to the available means. Often the place where the welding has to be made is so difficult that opting for a bolted connection will limit the number of errors caused, therefore ensuring the quality of the union and simplifying the performance of verification tests, such as the use of torque wrenches.

3.3 Steel profiles

The metallic structures are formed by steel profiles. Standard profiles are generally used to build, although profiles with specific shapes and / or special measures can also be requested from the steelworks.

In this project, as in most of them, we will use standard profiles. I will make a list of the most known structures, and I will name the other possible forms that they may have.

All of them can be used as main profiles of a single piece and there is also the possibility of joining more than one profile to perform other geometries with different properties such as, for example, to achieve a higher moment of inertia in comparison to a single profile.

This particular case is found in the hall of our university ESEIAAT, where we find a series of profiles in L joined by rivets, to form a pillar with a greater moment of inertia compared to an IPE of the same caliber. Thus we achieve a more slender profile, but more resistant to the efforts that we suppose as the main ones.

The following image illustrates the most used profiles.

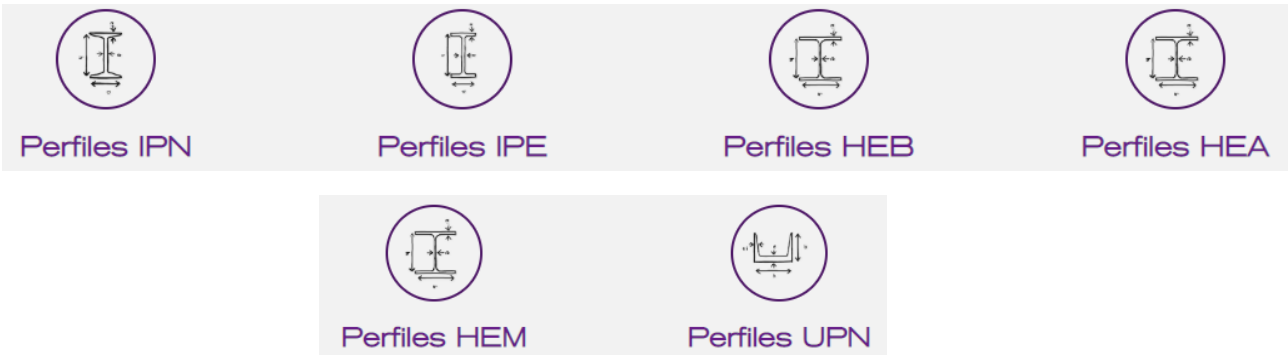

Illustration 10 - Steel profiles [7]

All these types of profiles are processed through a hot rolling process, for which I will explain in the following section.

3.3.1 Hot rolling

Hot rolling has a great number of advantages, among which we can highlight one that differentiates it from all other models of forming metal profiles: the internal low residual tension of the section. All of this is thanks to the absence of welds or joints, generating a uniform solid with a better resistance to loads compared to other methods that have secondary processes.

Illustration 11 - Hot Rolling [8]

In addition, as a linear process, it can generate solids of large dimensions without suffering variations in its interior architecture. That causes a greater cost reduction in these profiles, which can currently be purchased in various sizes, and lengths depending on the size.

3.4 Protection against the fire

As previously mentioned, metallic structures at high temperatures (> 500°C) in case of fire may have the structural profile vary. Consequently their resistance will be reduced and the modulus of elasticity decreased; properties that would now cause the structure to collapse according to the initial calculation.

Currently, the fire safety regulations require the fireproofing of industrial buildings and ships in order to being able to start working, but it does not require the fireproofing of houses built with metal structures.

Among the most used fireproofing techniques we find intumescent paint as well as perlite and vermiculite mortar, which allow us to maintain the properties until the fire is extinguished and the building evacuated.

Illustration 12 – Fireproofing [9]

Flame retardant concrete has good properties envolving fire resistance, so it is still one of the most used to protect a structure against fire.

The application of this material is made through projection thanks to a compressor and a mixer.

In order to allow the adhesion of the material to the steel profile, the concrete must be damp and the structure must be clean and free of grease.

Our project will be fireproofed with fireproof concrete.

3.5 Quality controls

Welding processes are present in our environment in any type of construction, whether machines, ships, trains, airplanes, bridges, cars, or in any type of union.

Welded parts and elements require verification of how the manufacturing process was developed. These verifications are also preventive maintenance at an industrial level, as the presence of cracks, nodes, slag and imperfections can cause the pieces to break.

This is why quality controls are carried out. Especially in this section we will talk about welding analyses, which are mainly two types: destructive and non-destructive analysis.

A non-destructive testing (NDT) is a type of test applied to a material that does not permanently alter its mechanical, physical, dimensional or chemical properties.

These are the different types of controls.

- Visual test
- Tests with penetrating liquids
- Ultrasound test
- Inspection with magnetic particles
- Inspection by induced current
- Inspection by radiography
- Inspection with gamma rays
- Loss tests

4. Regulations

Nowadays there are 3 main regulations within the main Spanish legislation regarding the construction of steel structure projects

Illustration 13 – Regulations [10]

The three documents coexist with a higher or lower rate of ressemblance between them.

4.1 Euroscode [Eurocódigo (EN 1993)]

This Eurocode is formed by many parts and subparts. I will announce the most important ones in accordens to the rules that may be applied in each case:

- EN 1993-1-1:2005 + AC:2009. General rules and rules for buildings.
- EN 1993-1-2:2005 + AC:2009. Resistence to fire.
- EN 1993-1-3:2006 + AC:2009. Profiles and plates of thin walls conformed in cold.
- EN 1993-1-5:2006 + AC:2009. Flat plates charged in their plane.
- EN 1993-1-8:2005 + AC:2009. Unions project.
- EN 1993-5:2007 + AC:2009. Piles & sheet piles.

This eurocode is commonly accepted, but its realisation is not compulsory within Spanish territory.

It is the most complete regulation of the main three, including the calculation of mixed steel & concrete structures, which CTW and EAE do not contemplate as they are reduced versions of the structural Eurocode.

4.2 Structural Steel Instruction [Instrucción de Acero Estructural (EAE)]

The Spanish Structural Steel Instruction is appliable to all structures and elements of structural steel of building or of civil engineering.

The structures formed by high resistance steels or mixed components, being concrete or other materials, will have to apply the Eurocode.

In relation to the measures for the prevention of occupational risks that may have be taken into account during the completion of the project and the implementation of the structures and the structural steel elements, the regulations that appear at the 24th of October Royal Decree 1627/1997, where minimum security & health at building works provisions are established.

4.3 Technical Building Code [Código Técnico de la Edificación (CTE DB SE-A)]

The Basic Structural Steel Security Document of the Edification Technical Code is addressed to verify the structure in terms of security within the metallic elements formed with structural steels.

It is only devoted to buildings, it must not be applied other type of works out of the area of homes or industries, such as bridges, silos, chimneys, tanks, etc.

This document references the security and the correct usage and durability conditions. The implementantion of requisites such as fire resistance of thermic & acoustic insulation are not contemplated in this document.

Quality controls, maintenance and assemblage aspects are briefly contemplated within this document.

4.4 The regulations in the calculation of resistance

Once we have been introduced to the calculation of the structure, we must apply different regulations depending on the selected profile.

- Tubular Profiles. The Structural Steel Instruction must be used (EAE). Or the Technical Code as well (CTE).
- Laminated or Reinforced Profiles. The Technical Code (CTE) must be used.

After this section, we can observe a graph that differenciates the interaction between axial & bending within the sections.

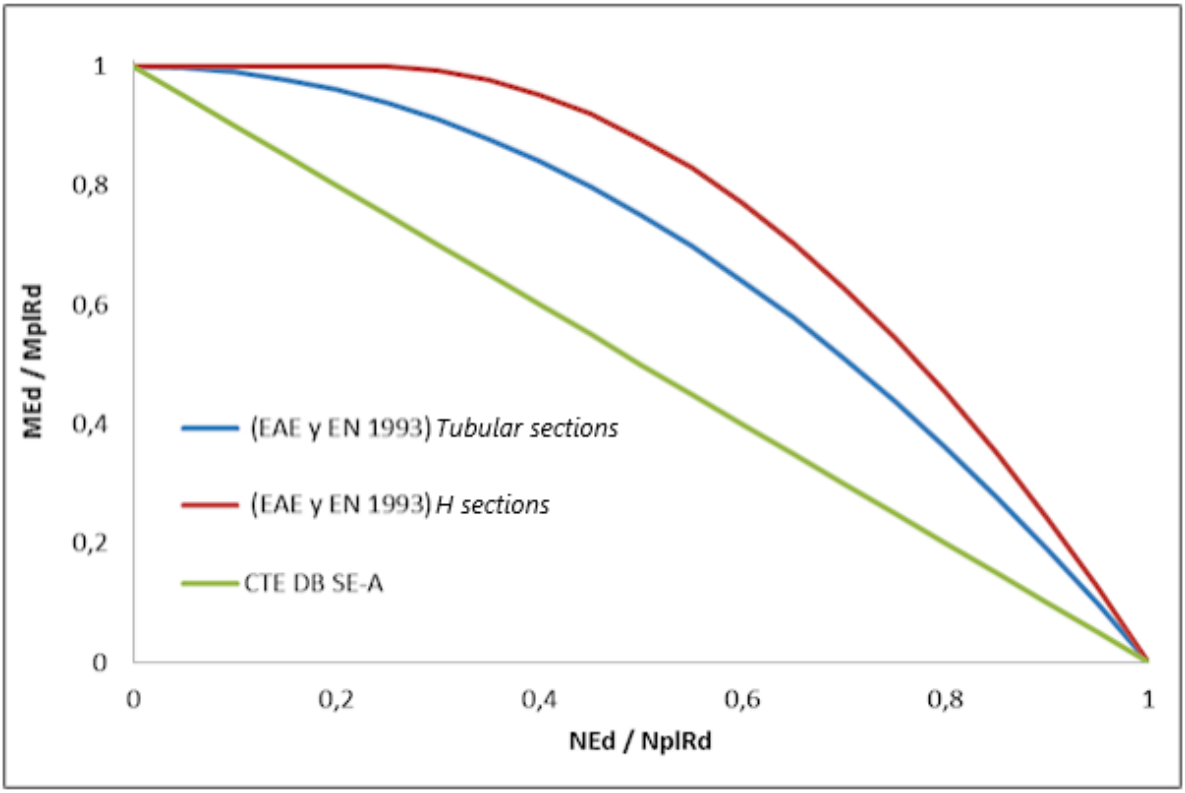

Illustration 14 - Graph of efforts [10]

On the one hand this is a clear example of how in the calculation of the section, regulations EAE and EN-1993 are much more benevolent.

On the other hand the use of CTE is much more conservative, where the resistent area is inferior, leaving an amount of less cases as possible solutions.

5. Softwares

In this section, I will explain what softwares have used for the calculation and for the design of the metallic structure of the project.

5.1 Calculation program

Nowadays calculation by hand is almost extinct (not taking into account some small applications and/or checks) and it generally tends to arrive in the professional environment by the hand of programs that provide infinitesimal, matrix or finite element calculation. Everything will depend on the level of desired precision and the application that is going to be overlooked.

For the field of our application, we will take advantage of a structural calculation program, which already includes both national and international standards for calculation, sizing and testing.

The selected program is called CYPE. It can work with structures of concrete, laminated steel, reinforced steel, formed steel, mixed, aluminium and wood, being all of them subject to gravitational actions, wind, earthquakes and snow.

Illustration 15 - Cype logo [11]

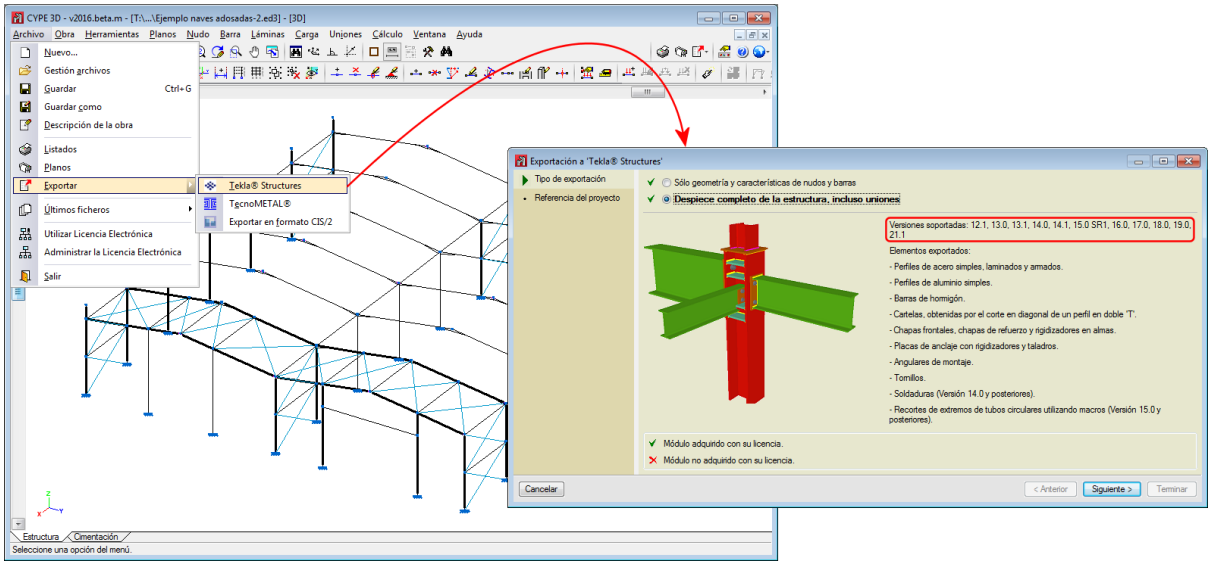

Illustration 16 - Cype menú [11]

Currently CYPE 3D automatically generates the weight of the introduced bars that will hence form a hypothesis of own weight. In the event of being necessary, it allows the addition of an indefinite number of additional hypotheses.

Illustration 17 - Cype hypothesis [11]

The most conflictive area of structures are the nodes. Within this section, CYPE allows the user to define the node as articulated, embedded, semiembedded, etc. And once the type of knot has been defined, we will proceed to define the type of ligation between the nodes.

The ligations between the nodes are used to indicate that two or more nodes have the same displacement in all the selected hypotheses, provided that there is an existing element that links the nodes to allow the fulfilment of the hypotheses.

Illustration 18 - Cype links [11]

CYPE 3D uses all the previously explained regulations for his calculation of welded unions, emphasising that En-1993 is their general document and CTE, DB, SE-A, & EAE are the other regulations only appliable within Spanish territory.

5.2 Design program

As it has already happened with calculation, the paper-pen method is rarely used to carry out large-scale projects or complex sets. We currently have a wide range of design programs, even providing plans in several dimensions.

For our project we will use the program called Tekla Structures. This design program allows us to model the structure in 3 dimensions, to make complex connections and to be able to visualize the project from any desired perspective.

Illustration 19 - Tekla logo [12]

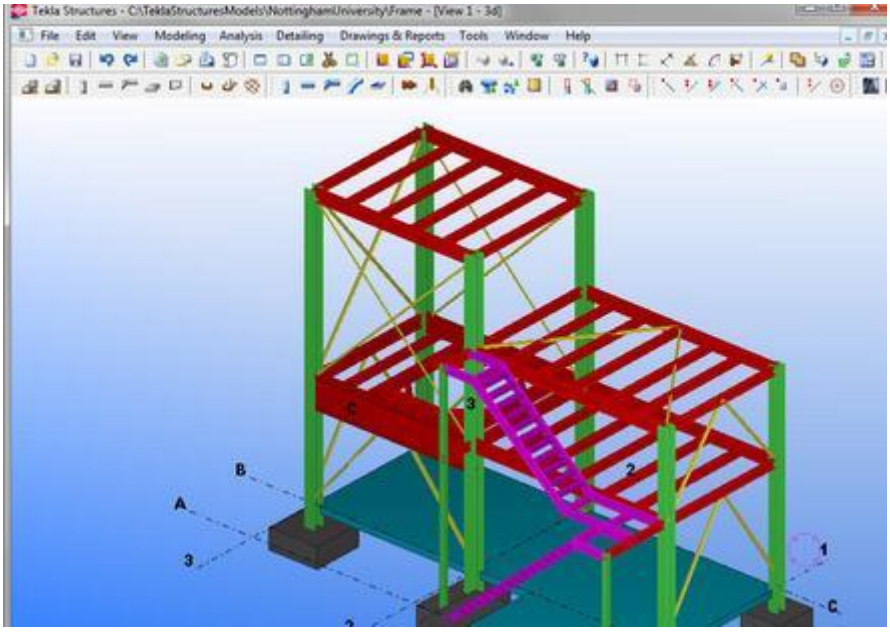

Illustration 20 - Tekla structure [12]

Tekla structures has a parametric concept that allows you to modify and create elements quickly and easily.

When creating unions, they depend on the measures of the concomitant beam or pillar. Therefore, when modifying the dimensions, the program will automatically make the relevant changes in that area.

This can be a great advantage, but also a great point to take into consideration due to the large number of failures that depend on this function. Once a piece changes its dimensions, it is instantly considered as a new piece. Therefore, the program re-generates a totally different identification number.

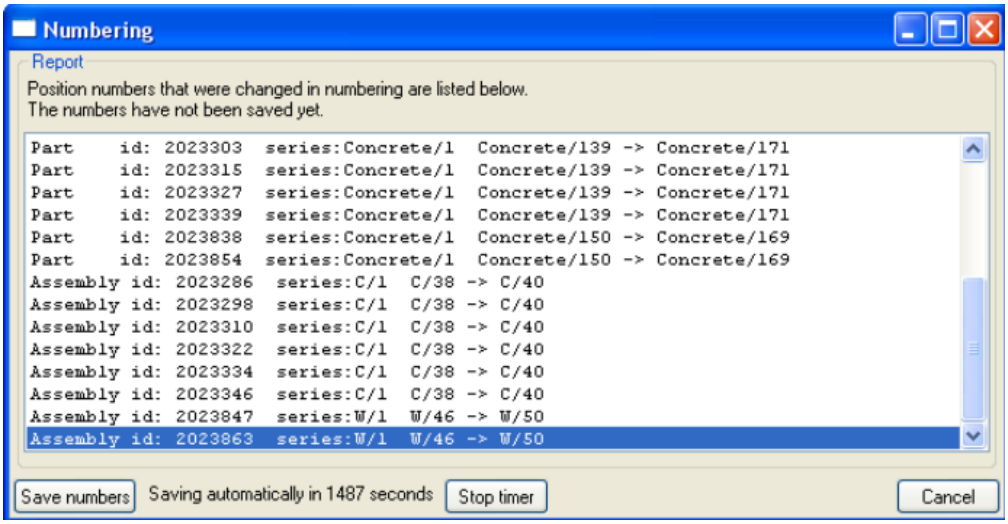

Illustration 21 - Tekla list [12]

If assembly plans have been delivered, it will happen that two different marks will appear for the same piece, thing which can sometimes be differentiated by only 1mm of difference in a piece of 2m in length, which on place is undetectable for the human eye or measure elements due to the % of human error.

Therefore, all assembly plans with this new numbering must be regenerated.

Once the design has been completed, you can generate the general design, the exploding and manufacturing plans and also obtain as well the list of materials and therefore part to do the pertinent purchases of the necessary material with its dimensions. With all this, the certification of the structure can be done later.

I am going to attach down below a little fragment of the lists generated by Tekla with the version used for this project (Tekla structures).

Perfil	Parte	Material	Número	Longitud (mm)	Área (m²)	Peso (kg)
HEA120	p51	S275JR	1	6522	4.42	129.7
HEA120	p139	S275JR	4	3422	2.32	68.1
				20210	13.68	402.0
HEA140	p1	S275JR	1	3022	2.40	74.5
				3022	2.40	74.5
HEA160	p4	S275JR	1	3022	2.74	92.0
HEA160	p5	S275JR	1	6130	5.55	186.6
HEA160	p6	S275JR	1	3030	2.75	92.2
HEA160	p138	S275JR	1	6522	5.91	198.5
				18704	16.95	569.2
HEA180	p48	S275JR	3	6522	6.68	231.7
				19566	20.04	695.0
HEA200	p3	S275JR	1	6130	6.96	259.0
				6130	6.96	259.0
HEB160	p49	S275JR	1	3030	2.78	129.0
				3030	2.78	129.0
HEB180	p2	S275JR	1	6522	6.76	334.1
				6522	6.76	334.1
IPE120	p17	S275JR	4	2721	1.29	28.2
IPE120	p20	S275JR	2	3554	1.69	36.8
IPE120	p70	S275JR	1	5405	2.57	56.0
IPE120	p99	S275JR	1	3215	1.53	33.3
IPE120	p100	S275JR	1	3624	1.72	37.6
IPE120	p101	S275JR	2	3321	1.58	34.4
IPE120	p103	S275JR	1	5076	2.41	52.6
IPE120	p104	S275JR	1	5416	2.57	56.1
				47369	22.50	490.8
IPE140	p19	S275JR	1	1835	1.01	23.6
IPE140	p21	S275JR	1	5475	3.02	70.5
IPE140	p22	S275JR	1	5535	3.05	71.3
IPE140	p74	S275JR	1	5459	3.01	70.3
IPE140	p75	S275JR	1	5577	3.07	71.8
IPE140	p102	S275JR	1	3555	1.96	45.8
				27436	15.12	353.2
IPE160	p15	S275JR	1	3637	2.27	57.4
IPE160	p16	S275JR	1	1742	1.09	27.5
IPE160	p43	S275JR	1	2992	1.86	47.2
IPE160	p44	S275JR	2	3266	2.03	51.5
IPE160	p45	S275JR	1	3584	2.23	56.5
IPE160	p46	S275JR	1	2675	1.67	42.2
IPE160	p47	S275JR	1	2344	1.46	37.0

Illustration 22 - Tekla list of materials [13]

6. Characteristics

6.1 Materials

The material for the calculation is structural steel S 275 JR.

The fundamental values for the design of steel parts are:

- The elastic limit. The elastic limit is the unit load for which the yield stage starts, that is, from which the deformations are not recoverable.
- The breakage limit. The limit of breakage is the maximum unit load supported by the steel in the tensile test.

The values of the elastic limit and breakage of the steel that I am going to use are:

- Elasticity Module: E = 210 GPa

- Stiffness Module: G = 81 GPa

- Poisson's coefficient: ν = 0,3

- Coefficient of thermal expansion: α = 1,2·10-5 (ºC)-1

- Density: ρ = 7.850 kg/m3

6.2 Geometry

The geometry of the house is based on two rectangular floors of 16.6 x 9.6 and 13.55 x 6.75 meters, with a height of approximately 6.5 meters.

This is the original plan received to design and calculate the house, in which notes are found by the architecture.

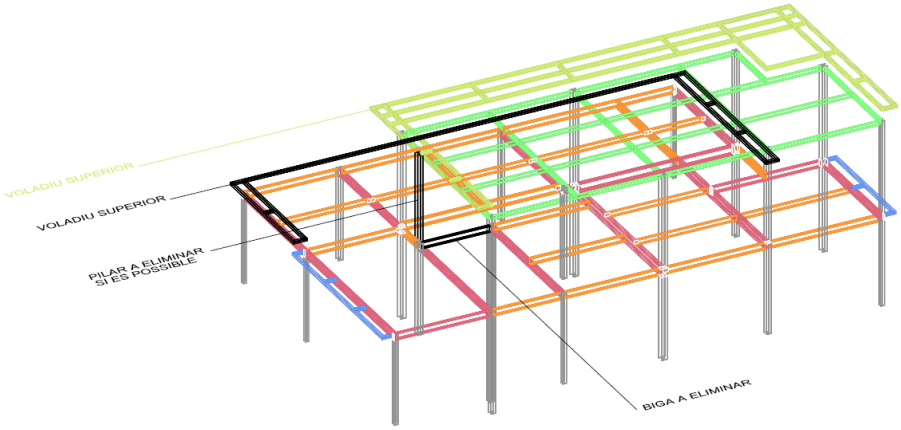

Illustration 23 - Structure 3D [13]

In this view in 3 dimensions, they request to eliminate, if posible, some beams and pillars once the calculation is being made.

6.3 Location

The structure will be assembled in Passeig del Nard nº 101, 08195 Sant Cugat del Vallès, Barcelona.

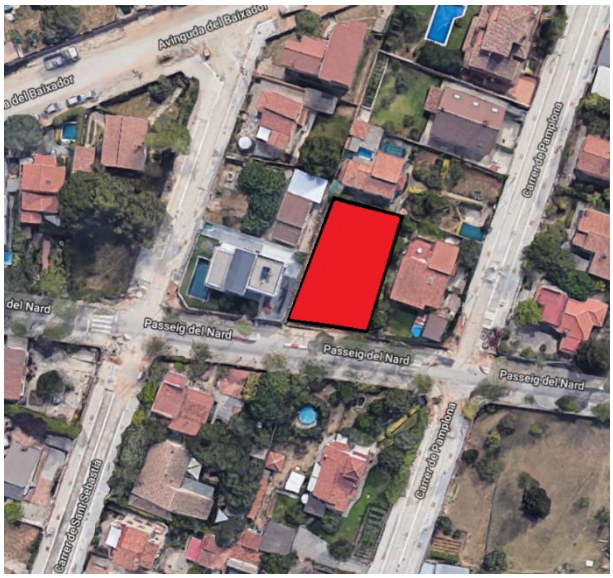

Illustration 24 – Location [13]

Location in coordinates: 41°27'58.4" N, 2°02'42.0" E

7. Structural design

The design has been carried out by VazqueziBenages, an architecture firm specialising in houses, pools and spas.

This structure has been designed with a modern and simple base, and simple, clean lines with a focus on minimalism.

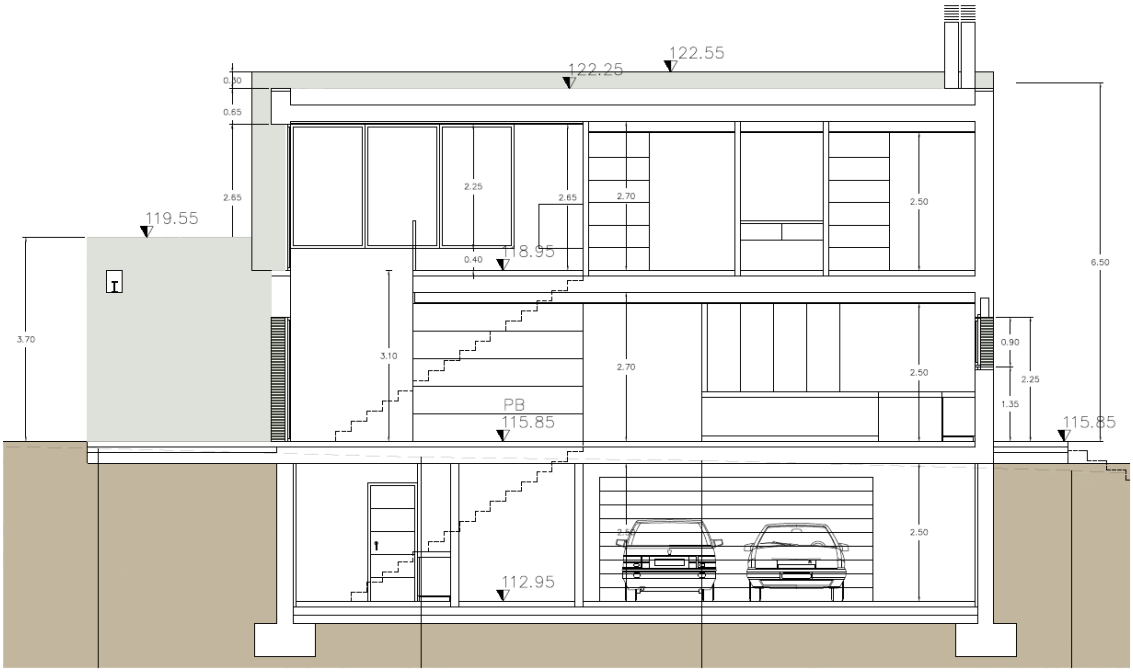

Illustration 25 - Architecture design 1 [14]

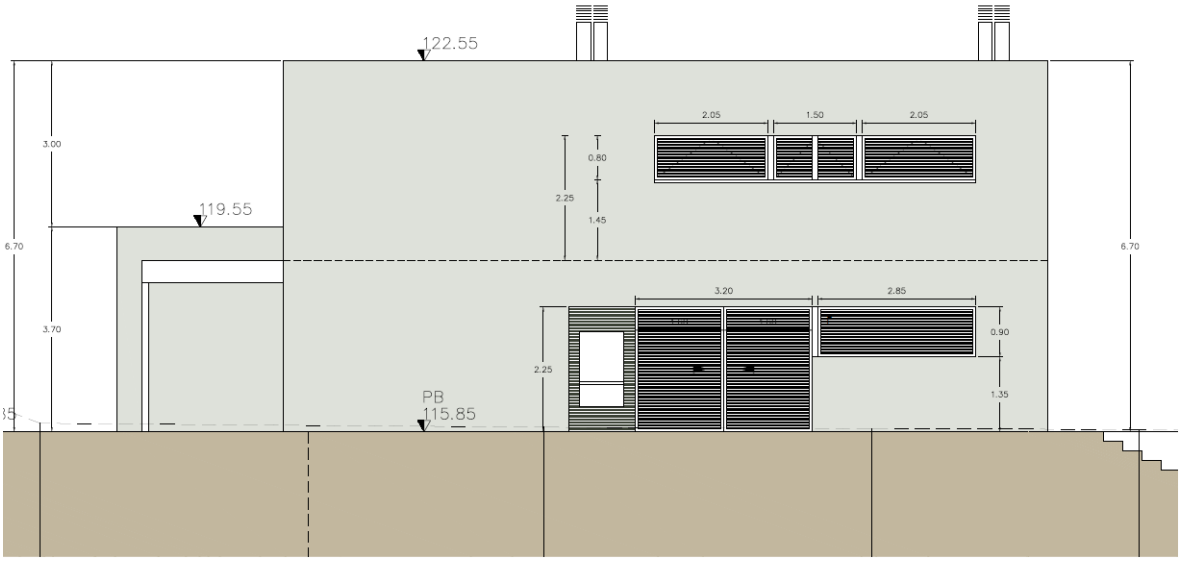

Illustration 26 - Architecture design 2 [14]

The whole main structure will be hidden between the walls; as the structure is made of steel, the pillars can be more slender.

The joists will be the base of the roof, which will also be hidden.

7.1 Anchorage plaques

All the pillars have been anchored to the ground through a threaded M16 rebar.

Below is a detail of how the anchor plates are formed.

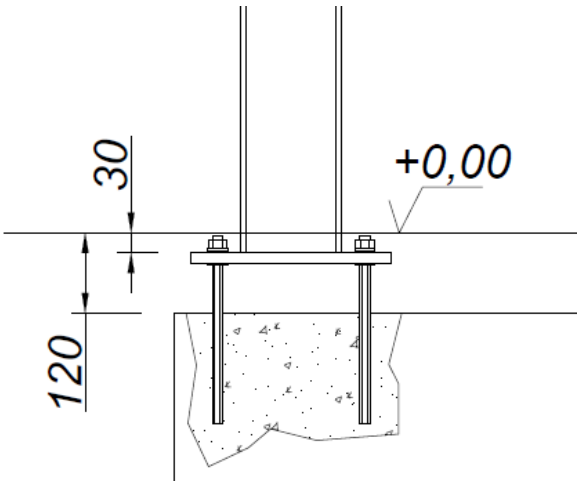

Illustration 27 - Anchorage plaque [13]

All the rebars are introduced into the concrete together with maximum-performance hybrid resin for heavy load anchors, in this case model HIT-HY 200-A by HILTI (see spec sheet included in the annexes).

Illustration 28 - Hilti tool [15]

7.2 Floor Distribution

The house consists of two floors; this is further explained below, together with floor and roof plans.

7.2.1 Pillar plan

The pillar distribution of this house is as follows:

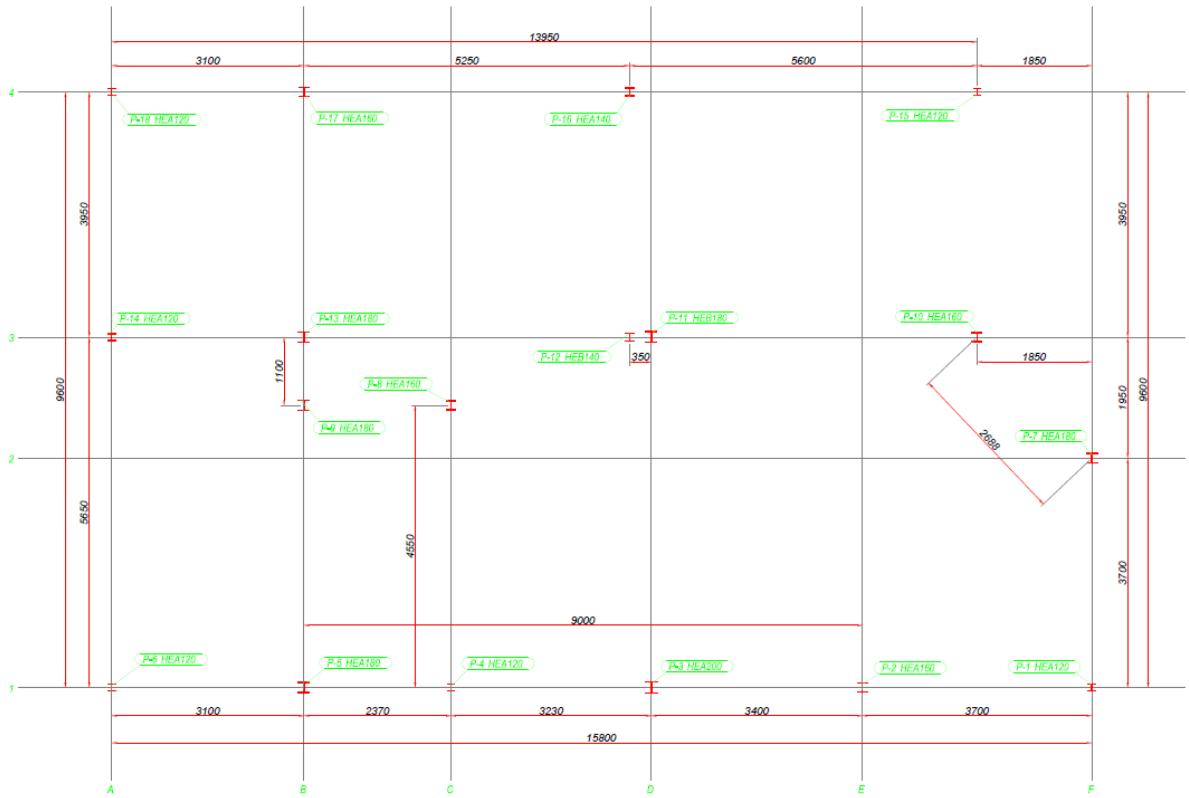

Illustration 29 - Pillars plan [13]

Attempts have been made to meet architectural requests, keeping the number of maintaining inner pillars to a minimum, and when pillars are necessary, to make them as slim as possible.

There are a total of 18 pillars, all of them located with the wings in a horizontal position, as can be seen in the above image.

7.2.2 1st Floor

On this floor, although different widths of laminated profiles coexist, all of them have the same shape, namely the IPE profile.

For the main joints we use a wider profile, IPE 200.

In cases where it was necessary to increase resistance, IPE 270 and IPE 240 profiles were used.

The cantilevers are formed with an 80x4mm square tubular profile.

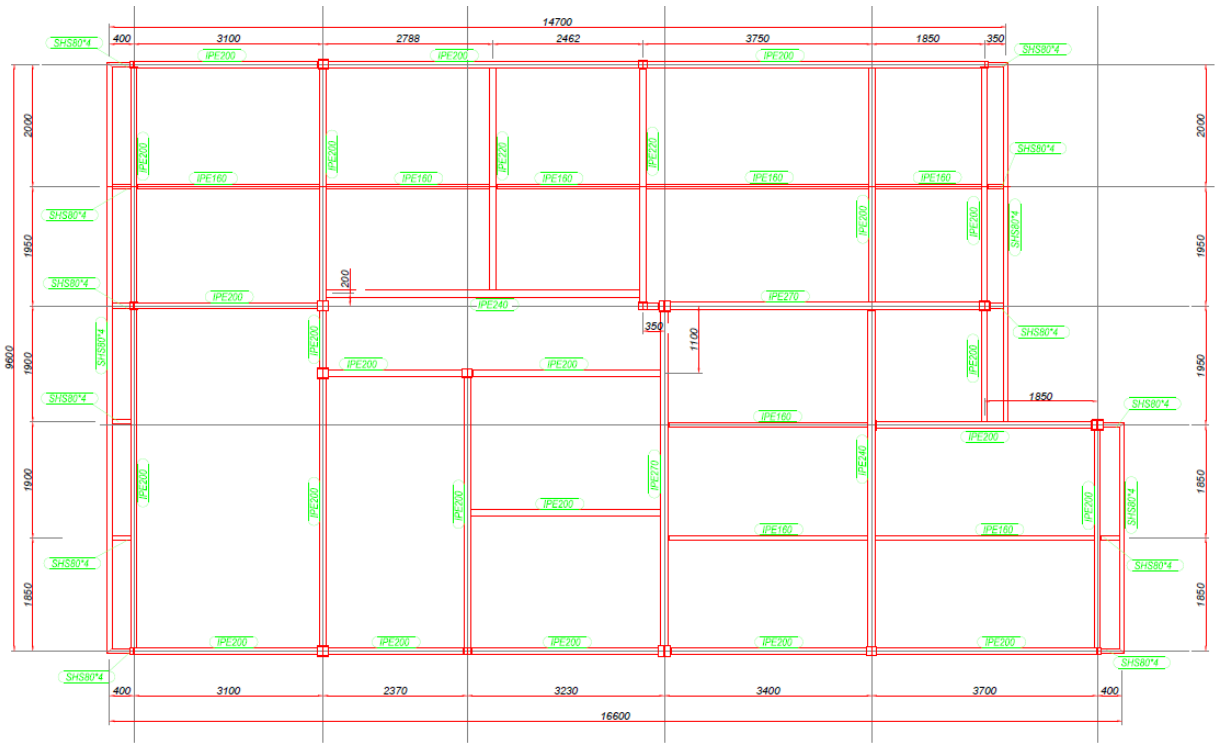

Illustration 30 - 1st floor plan [13]

As we can see, the shape of the house on the first floor is simple, made with a set of rectangles.

The main beams are embedded in the stiffened pillars with their corresponding stiffeners.

The joists are also encased in the beams making the necessary cuts in the wings.

Below we will list the main pillars and their elements.

7.2.3 Roof

The roof of the house follows the same trend as its other parts, with simple, flat forms and welded joints.

The roof has been generated with IPE 120 profiles for horizontals and IPE 140 profiles for verticals.

The cantilevers are formed by 80x4mm square tubes, but in this case they are longer than on the first floor. Later in this study we will analyse in detail the stresses to which this cantilever is exposed and how the rectangular tube can support the loads with so much distance between supports.

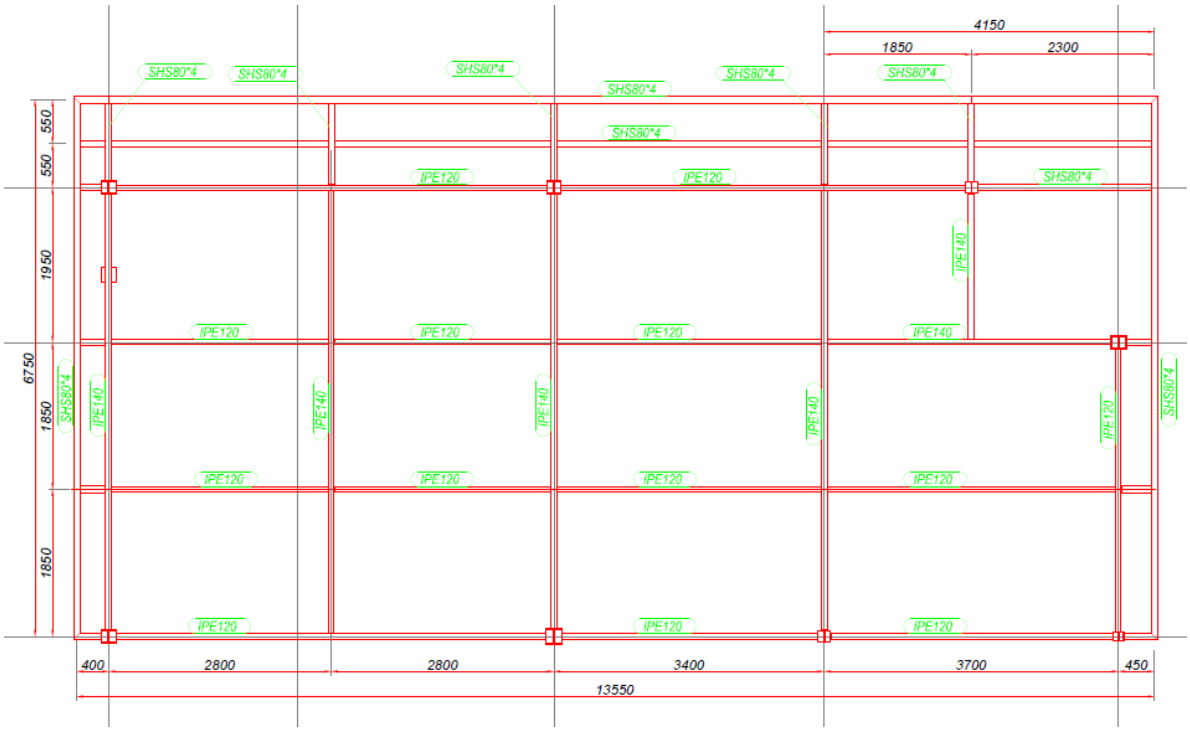

Illustration 31 - Roof plan [13]

Only the outer pillars start at the base of the structure and finish on the cover, thus ensuring that the first floor is kept free of interior pillars, as requested.

All the pillars end with a plate so as to close at the top.

7.3 Double cover

The roof of the house is a gable roof towards the interior, consisting of a slope of approximately 8°.

In the following image the cover is highlighted in blue.

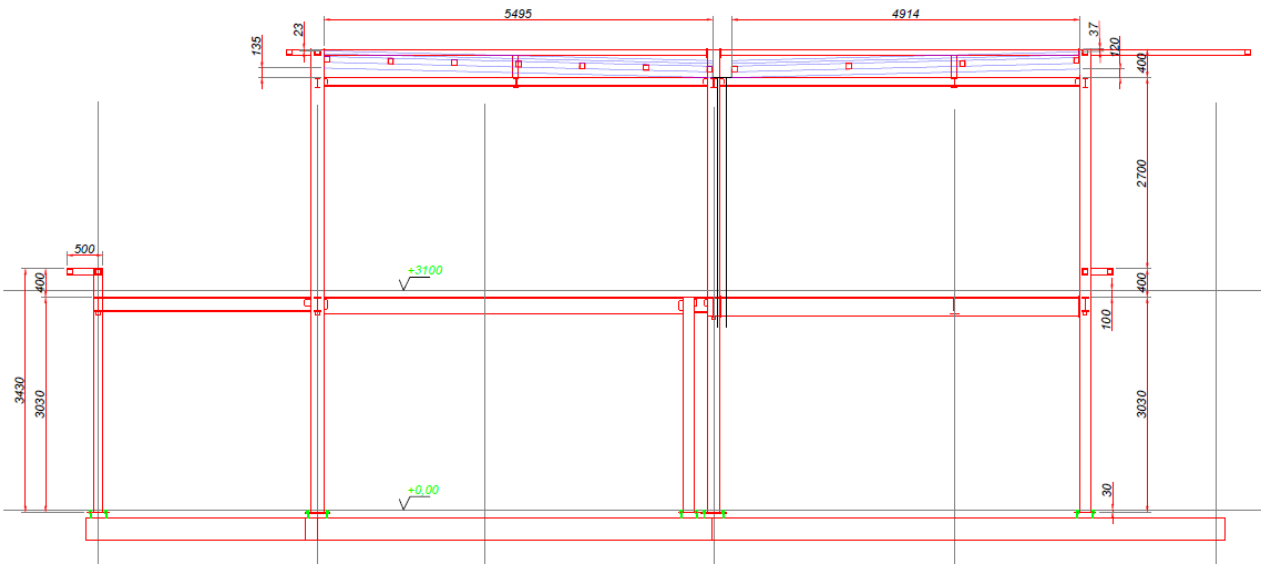

Illustration 32 - Side view plan [13]

The upper part of the roof is completely hidden with the elevation of the cantilever, the entire water slope will be made through a central gutter with a downpipe.

The roof panels will be supported on the 80mm galvanized square tube upper structure.

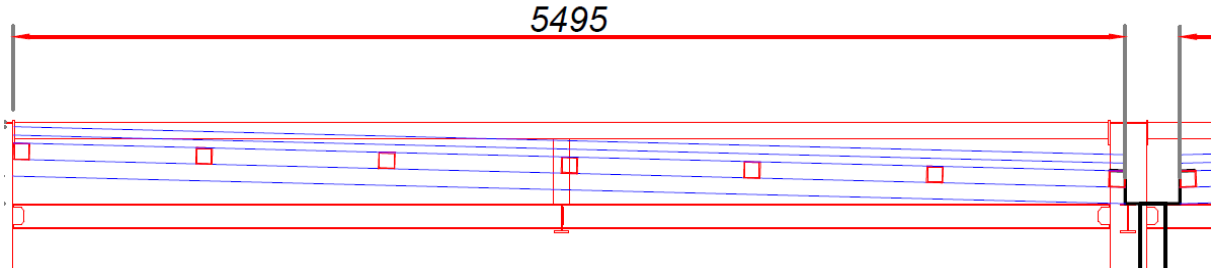

Illustration 33 - Cover plan [13]

In this image we can more clearly see the slope of the roof, as it carries water into the galvanised channel.

- The channel will be manufactured in 1.5mm galvanised sheet.

7.4 Main pillars

This is the main pillar of the house - it is the highest and thickest one.

It is a laminated profile HEB 180, corresponding to European regulations, and its section has a double T shape with a weight of 51.2kg/m. This type of profile supports large forces of torsion, bending and compression in pillars, which is why it is most commonly used in pillars of a metal structure. All this is thanks to its symmetrical exterior dimensions ensuring that the two moments of inertia are more balanced, without creating a moment change when turning the central face.

There are two very similar variants in terms of shape, but the weight per meter will vary, being lighter (HEA) or heavier (HEM) depending on the needs of each structural engineer and designer.

(the full plan is attached under the Drawings document)

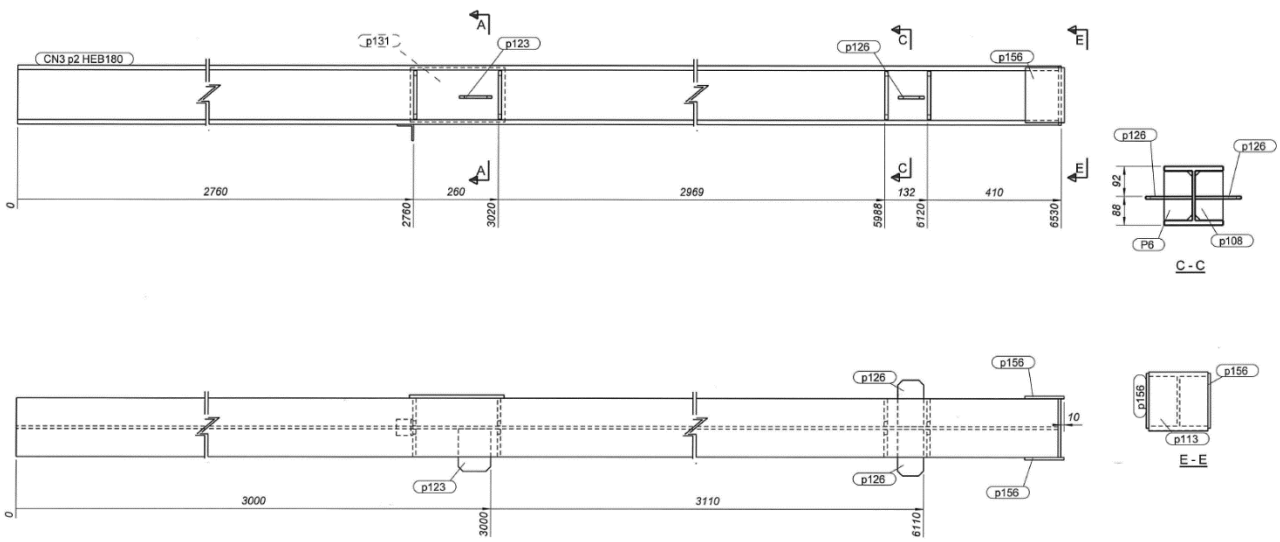

Illustration 34 - Set CN3 plan [13]

Below is the list of parts of the CN3 set:

LISTA DE PARTES DE CONJUNTO

Conjunto: CN3 Número: 1

Acabado: Long. (mm): 6540

Parte	Perfil	Material	Número	Long. (mm)	Peso (kg)
P6	PL10*85	S275JR	4	148	3.9
p2	HEB180	S275JR	1	6522	334.1
p108	PL10*85	S275JR	4	148	3.9
p109	L50*5	S275JR	1	50	0.2
p113	PL180*8	S275JR	1	181	2.0
p123	PL130*8	S275JR	1	100	0.8
p126	PL80*8	S275JR	2	143	1.4
p131	PL290*10	S275JR	1	166	3.8
p156	PL120*8	S275JR	2	168	2.5
				Total por conjunto	352.6

Illustration 35 - CN3 parts [13]

This pillar is formed by several pieces that simulate the continuity of the concomitant beams. The pieces called stiffeners are used to stiffen the knot.

Thanks to these pieces, we could say that the pillar is composed of 3 sections, so that each floor can be welded on it in the designated area, although physically we can see that it is in fact only one section.

In addition, a 180x180x8 plate is installed in the upper part to create the pillar capital.

7.5 Main Beams

7.5.1 First Floor

This is the main beam of the structure as it is the widest. It supports several main first floor joists and it will also join two of the building's structural pillars.

The laminated profile IPE270 used is also commonly known as the double-side profile of parallel faces, where the number following the acronym IPE indicates the total height of the profile expressed in millimetres. The weight of this profile is 36.1kg/m, maintaining a proportion between profile height and wing width less than 2/3.

(the full plan is attached under the Drawings document)

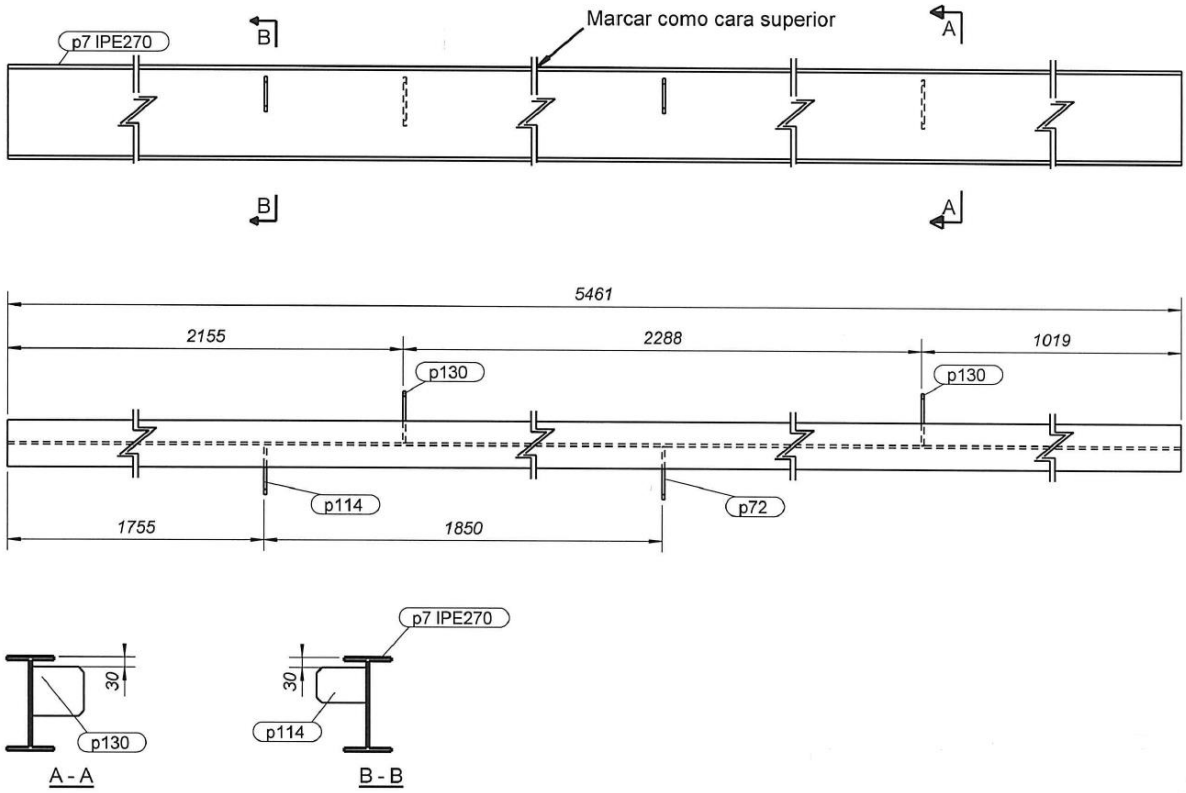

Illustration 36 - Set CN9 plan [13]

This is the list of parts of the CN9 set:

LISTA DE PARTES DE CONJUNTO

Conjunto: CN9 Número: 1

Acabado: Long. (mm): 5461

Parte	Perfil	Material	Número	Long. (mm)	Peso (kg)
p7	IPE270	S275JR	1	5461	196.8
p72	PL100*8	S275JR	1	153	0.9
p114	PL100*8	S275JR	1	143	0.9
p130	PL150*8	S275JR	2	140	2.6
				Total por conjunto	201.2

Illustration 37 - CN9 parts [13]

The beams tend to have fewer elements added than the pillars, but these elements are no less important because of it; thanks to them, we can more easily weld the main joists, so the exact position can already be indicated right from the workshop, thus avoiding potential errors in the construction.

7.5.2 Roof

In the roof the same beam will be used, but in a higher position; in this case it is a narrower profile, but still larger compared to the rest.

It is an IPE140 profile with a weight of 12.9kg/m. It is a leaner beam, but it still tolerates the force to which it is subjected.

The width of the wings of this profile is 73mm, wide enough to fix the panel by mechanical anchors, without major issues.

(the full plan is attached under the Drawings document)

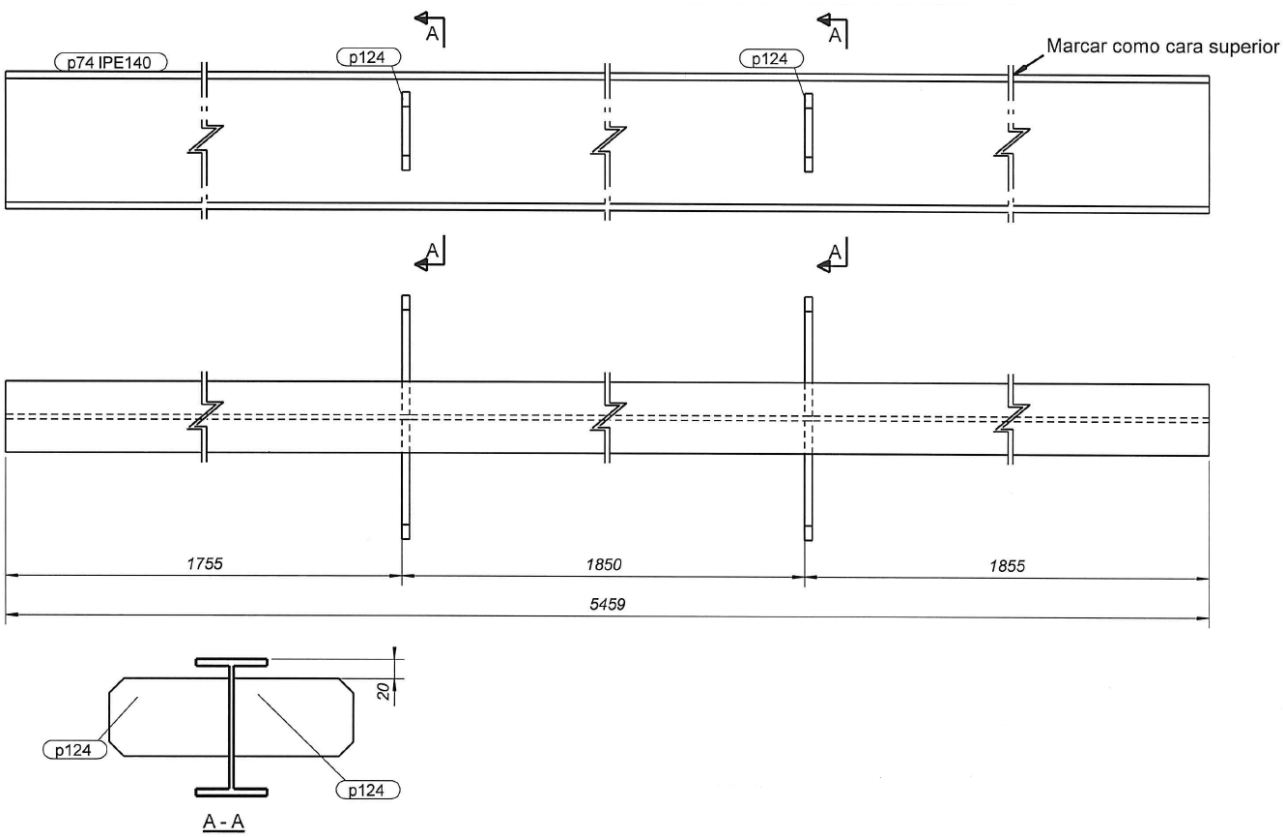

Illustration 38 - Set CN69 plan [13]

This is the list of parts of the CN69 set:

LISTA DE PARTES DE CONJUNTO

Conjunto: CN69 Número: 1

Acabado: Long. (mm): 5459

Parte	Perfil	Material	Número	Long. (mm)	Peso (kg)
p74	IPE140	S275JR	1	5459	70.3
p124	PL80*8	S275JR	4	123	2.4
				Total por conjunto	72.7

Illustration 39 - CN69 parts [13]

This beam, like the previous one, does not have many additional elements, but it is of great help that it can be made in the workshop, thus again avoiding possible errors in the construction and facilitating assembly.

7.5.3 Joist

The main joist is inserted inside the section of the beam, since its positioning might lead to confusion once the work has begun if we only observe how it is located.

In this case we will not have a list of set parts nor large sizes in terms of section in the laminated profile.

The weight of this laminated profile is 15.8kg/m.

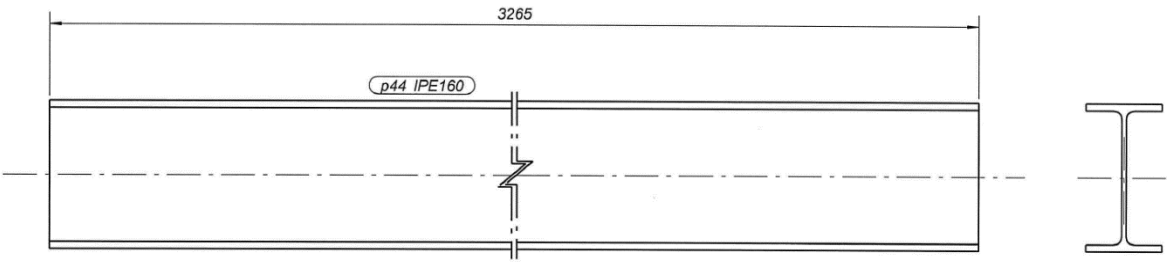

Illustration 40 - P44 plan [13]

The IPE160 profile is surprising as we do not expect a joist to be wider than the main beam of the roof, but this joist is extracted from the first floor, which will constantly receive loads, while the roof will only support the snow load and one-off services, actions that we assume will be non-concomitant.

(the full plan is attached under the Drawings document)

8. Calculation

This is the three-dimensional structural set rendered by Cype3D.

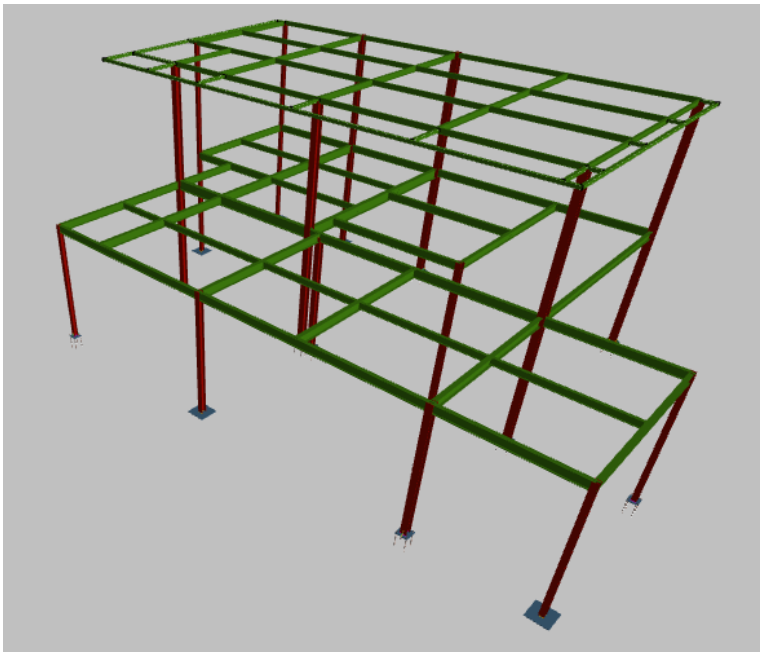

Illustration 41 - Structure Cype 3D [13]

8.1 Calculation

The calculation is carried out using the matrix analysis method using the Cype3D computer program, performing all the load combinations with the coefficients recommended by the CTE-DB-SE and checking strains and deformations in all the bars. Everything is in accordance with regulations, especially the CTE and the EAE.

8.2 Adopted Solution

Once we started calculating, we had to make some changes.

We respect the design but the cantilevered structure does not meet applied loads, so we reinforce that section with some extra joists.

All calculations have been based on those previously made by the company manager, with his help in drawing the structure in Cype3D and making the sets, among other things.

8.2.1 Pillars

Pillars are adopted by HEA profiles since they have a good inertia-resistance ratio to resist loads.

The following parameters are calculated using Cype3D:

- Limitation of slenderness.
- Web dent.
- Resistance to traction.
- Resistance to compression.
- Resistance to flexion.
- Cut resistance.
- Resistance to bending moment and combined shear force.
- Combined bending and axial resistance.
- Resistance to bending, axial and shear combined.
- Resistance to torsion.
- Resistance to shear and torque combined.

Below we will detail the results of the pillar with more unfavourable forces, verifying each of the points indicated above against the CTE DB SE-A regulation, thus ensuring the HEB 180 profile is adequate.

8.2.2 Beams

IPE laminated profiles are adopted for the solution of the main beams.

The following parameters are calculated using Cype3D:

- Limitation of slenderness.
- Web dent.
- Resistance to traction.
- Resistance to compression.
- Resistance to buckling
- Resistance to flexion.
- Cut resistance.
- Resistance to bending moment and combined shear force.
- Combined bending and axial resistance.
- Resistance to bending, axial and shear combined.
- Resistance to torsion.
- Resistance to shear and torque combined.

Below we will detail the results of the pillar with more unfavourable forces, verifying each of the points indicated above against the CTE DB SE-A regulation, thus ensuring the IPE 270 profile is adequate.

8.2.3 Joists

IPE laminated profiles are adopted for the solution of secondary beams or joists.

The following parameters are calculated using Cype3D:

- Limitation of slenderness.
- Web dent.
- Resistance to traction.
- Resistance to compression.

- Resistance to buckling
- Resistance to flexion.
- Cut resistance.
- Resistance to bending moment and combined shear force.
- Combined bending and axial resistance.
- Resistance to bending, axial and shear combined.
- Resistance to torsion.
- Resistance to shear and torque combined.

Below we will detail the results of the pillar with more unfavourable forces, verifying each of the points indicated above against the CTE DB SE-A regulation, thus ensuring the IPE 160 profile is adequate.

8.2.4 Joints

We will now look at welded joints between pillars and beams.

The joint will have the following form:

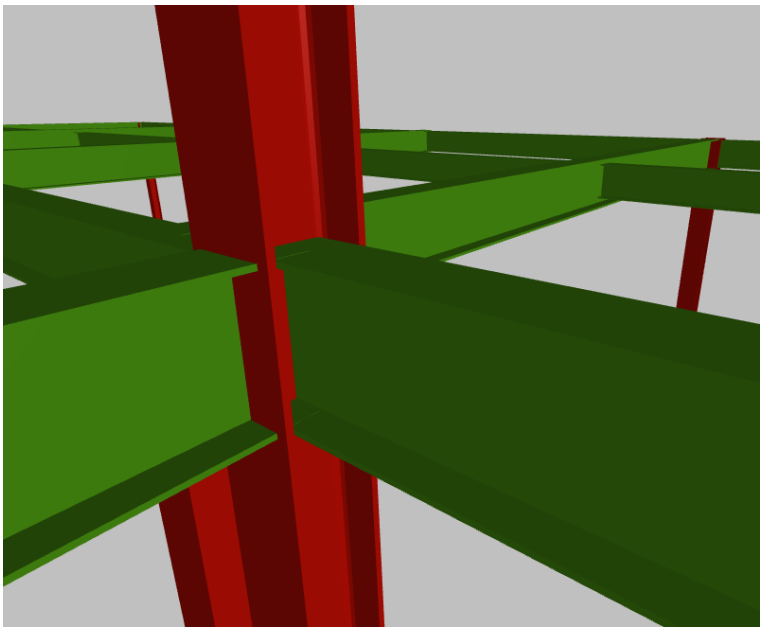

Illustration 42 - Joint between pillar and beams [13]

The joint between the pillar and the anchor plate is included in the calculation annexes, section 2.

8.2.5 Stiffeners

In our calculation program Cype3D we will include the option of stiffeners with cuts in the vertices. We use this option since our profiles have a curvature between the joint of the wings and the wen, so as to avoid creating conflicting points in that area.

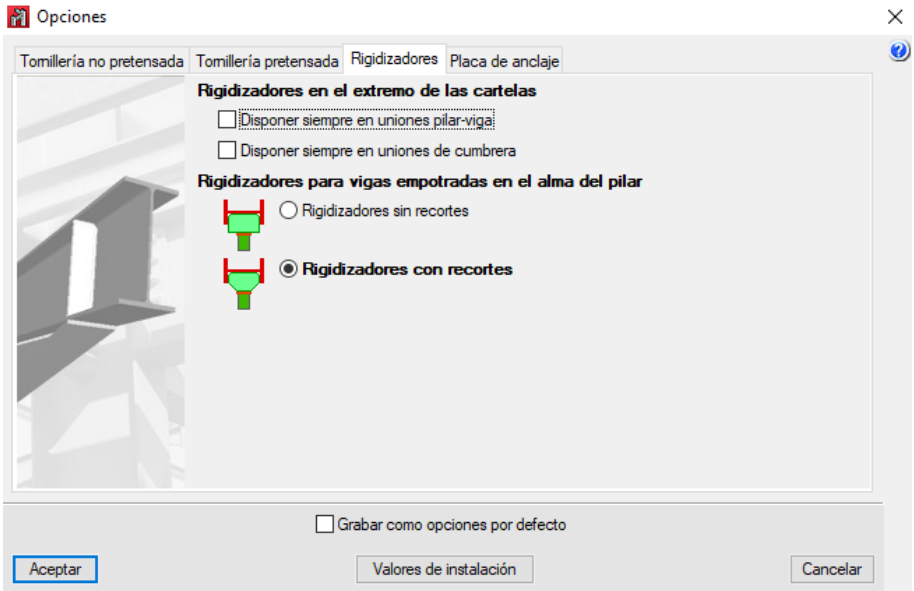

Illustration 43 - Cype stiffeners options [13]

8.3 Actions to consider

The following actions are considered:

- Own weight of the steel structure: The density of the steel is 7,850 kg/m^3, taking this into account the calculation program automatically introduces the weight of the defined profile in each bar.

- Snow overload: 50 kg/m^2 are considered.

- Overload of use: 300 kg/m^2 are considered, with a margin of 100kg/m^2.

- Permissible arrows: We consider arrow <(L/300) for gantry beams and joists.

- Permissible displacement: We consider displacement at the tip of <(h/250) for pillars.

- Forged own weight: 360kg/m^2 and 20kg/m^2 are considered, depending on the floor.

- Wind loads:

  - V1: 0,065 kg/m2.
  - V2: 0,045 kg/m2.
  - V3: 0,065 kg/m2.
  - V4: 0,045 kg/m2.

8.4 Combinations of actions

The combinations selected for the calculation are included in the calculation annex, section 1.

In section 2 of the calculation annex we can find an example of a calculation with the stress combinations in the main pillar, a HEB 180, whose selection will be justified later.

8.5 Resulting set

This is the summary of data obtained with the selected profiles to support the applied loads.

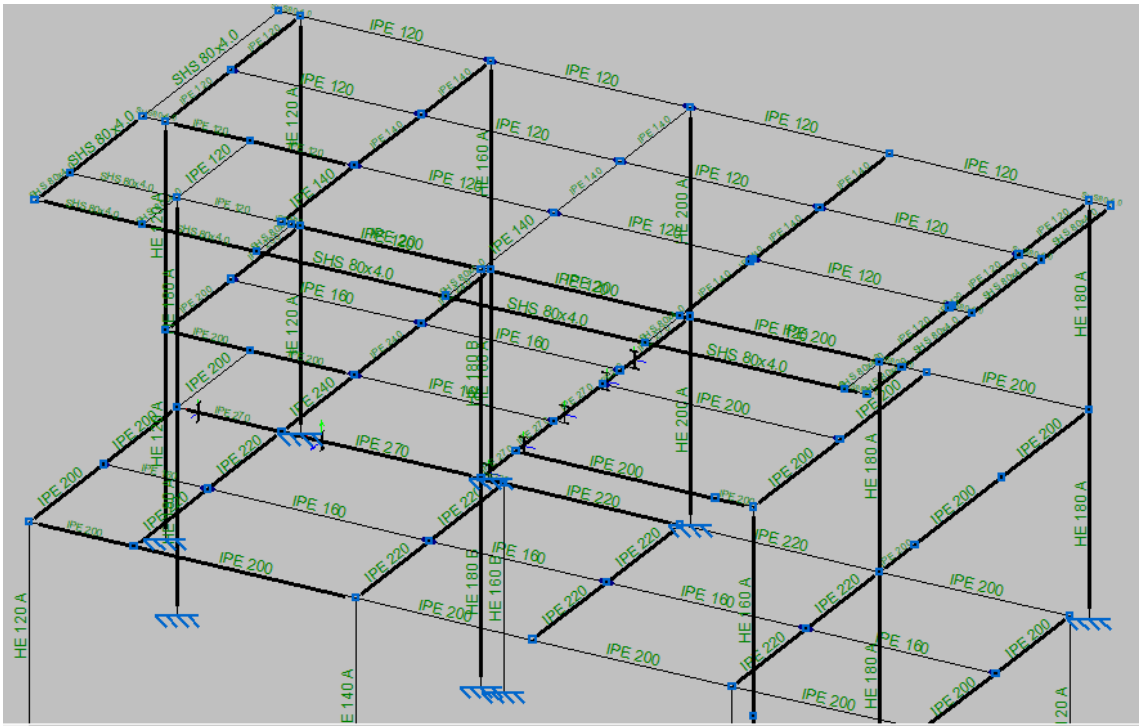

Illustration 44 - Summary of data [13]

8.5.1 Analysis of the most unfavourable pillar

These are the different profiles that the program allows us to select, within the HEB laminated profile.

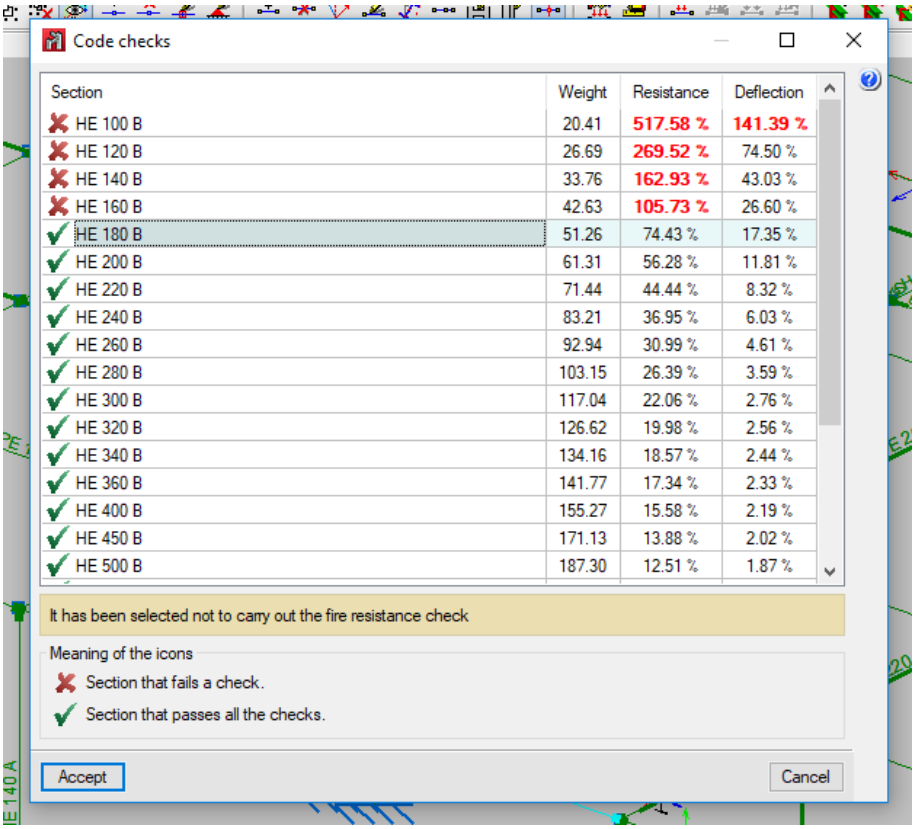

Section	Weight	Resistance	Deflection
HE 100 B	20.41	517.58 %	141.39 %
HE 120 B	26.69	269.52 %	74.50 %
HE 140 B	33.76	162.93 %	43.03 %
HE 160 B	42.63	105.73 %	26.60 %
HE 180 B	51.26	74.43 %	17.35 %
HE 200 B	61.31	56.28 %	11.81 %
HE 220 B	71.44	44.44 %	8.32 %
HE 240 B	83.21	36.95 %	6.03 %
HE 260 B	92.94	30.99 %	4.61 %
HE 280 B	103.15	26.39 %	3.59 %
HE 300 B	117.04	22.06 %	2.76 %
HE 320 B	126.62	19.98 %	2.56 %
HE 340 B	134.16	18.57 %	2.44 %
HE 360 B	141.77	17.34 %	2.33 %
HE 400 B	155.27	15.58 %	2.19 %
HE 450 B	171.13	13.88 %	2.02 %
HE 500 B	187.30	12.51 %	1.87 %

Illustration 45 - HEB180 pillar checks [13]

The first profile that meets all the demands is the profile used, in this case HEB 180.

If we analyse in terms of the arrow, the pillars do not tend to flex to a great extent, but the upper part does tend to displace as soon as they support the loads of the structure.

In terms of resistance, the first profile that complies is also within our limit of 80% resistance.

Please see attached the list of results in the calculation annexes, section 3.

In this section we can see all the test that were carried out and their results until the 0.74 safety in resistance was obtained.

8.5.2 Analysis of the most unfavourable beam – 1st Floor

These are the different profiles that the program allows us to select, within the laminated IPE profile.

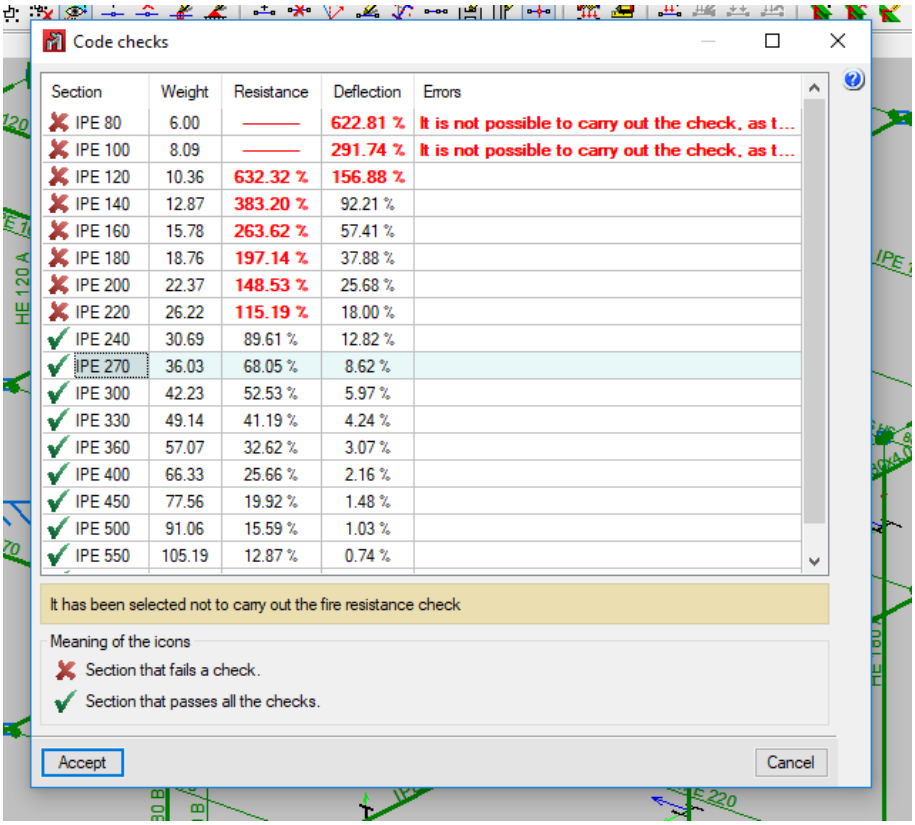

Section	Weight	Resistance	Deflection	Errors
IPE 80	6.00	———	622.81 %	It is not possible to carry out the check, as t...
IPE 100	8.09	———	291.74 %	It is not possible to carry out the check, as t...
IPE 120	10.36	632.32 %	156.88 %	
IPE 140	12.87	383.20 %	92.21 %	
IPE 160	15.78	263.62 %	57.41 %	
IPE 180	18.76	197.14 %	37.88 %	
IPE 200	22.37	148.53 %	25.68 %	
IPE 220	26.22	115.19 %	18.00 %	
IPE 240	30.69	89.61 %	12.82 %	
IPE 270	36.03	68.05 %	8.62 %	
IPE 300	42.23	52.53 %	5.97 %	
IPE 330	49.14	41.19 %	4.24 %	
IPE 360	57.07	32.62 %	3.07 %	
IPE 400	66.33	25.66 %	2.16 %	
IPE 450	77.56	19.92 %	1.48 %	
IPE 500	91.06	15.59 %	1.03 %	
IPE 550	105.19	12.87 %	0.74 %	

Illustration 46 - IPE270 beam checks [13]

If we select the profile in terms of the arrow, we can see that a 140mm profile would already comply with our limit of L/300, but as we observe the resistance we see that it is very thin and thus will not support the loads applied in that area. We therefore continue to oversize profiles until we find one that meets our required force demands.

The first profile that meets the resistance in this case is not the profile used for this first-floor beam, since we do not install profiles below 80% resistance; in this case we will install an IPE 270 profile.

Please see attached the list of results in the calculation annexes, section 4.

8.5.3 Analysis of the most unfavourable beam – roof

The following are the different profiles that the program allows us to select, within the laminated IPE profile.

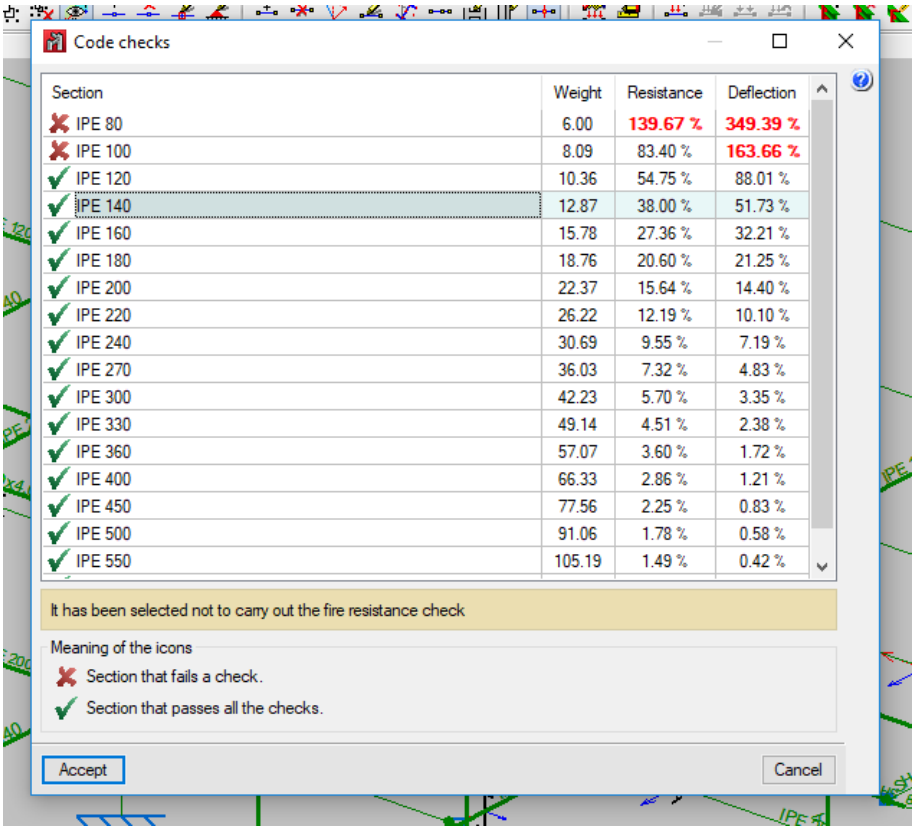

Section	Weight	Resistance	Deflection
IPE 80	6.00	139.67 %	349.39 %
IPE 100	8.09	83.40 %	163.66 %
IPE 120	10.36	54.75 %	88.01 %
IPE 140	12.87	38.00 %	51.73 %
IPE 160	15.78	27.36 %	32.21 %
IPE 180	18.76	20.60 %	21.25 %
IPE 200	22.37	15.64 %	14.40 %
IPE 220	26.22	12.19 %	10.10 %
IPE 240	30.69	9.55 %	7.19 %
IPE 270	36.03	7.32 %	4.83 %
IPE 300	42.23	5.70 %	3.35 %
IPE 330	49.14	4.51 %	2.38 %
IPE 360	57.07	3.60 %	1.72 %
IPE 400	66.33	2.86 %	1.21 %
IPE 450	77.56	2.25 %	0.83 %
IPE 500	91.06	1.78 %	0.58 %
IPE 550	105.19	1.49 %	0.42 %

Illustration 47 - IPE140 beam checks [13]

This study is similar to that of the first-floor beam: in terms of resistance we can opt for leaner profiles, but in terms of the arrow we must opt for greater moments of inertia to resist the loads applied especially in bending.

The first profile that meets our demands is not the profile used for this roof beam, since we do not install profiles below 80% of resistance in, either in pure resistance or bending; thus we will install an IPE profile 140.

Please find attached a list of results in the calculation annexes, section 5.

8.5.4 Analysis of the most unfavourable joist

The following are the different profiles that the program allows us to select, within the laminated IPE profile.

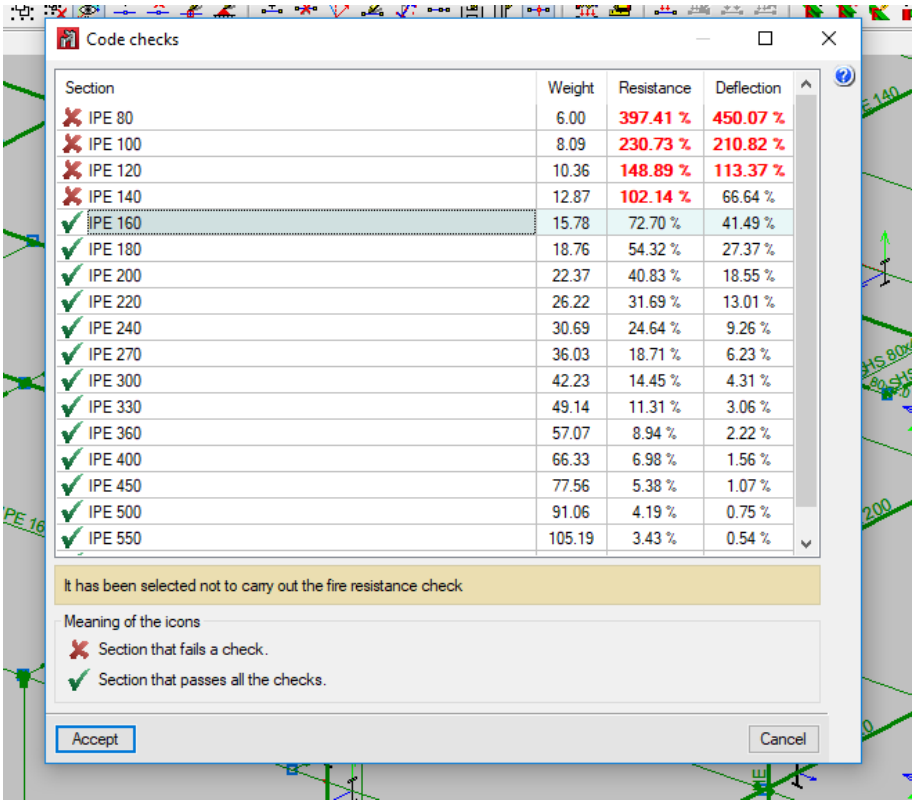

Illustration 48 - IPE160 joist checks [13]

The first profile that the program shows us as a viable option is the profile that was finally selected, as it already has a resistance below 80% and we believe that it is more than enough to support the requested loads.

Please find attached the list of results in the calculation annexes, section 6.

8.5.5 Cantilever analysis (80x4mm tubes)

Below is an analysis of the safety of this 80mm square tube to carry out the cantilevers.

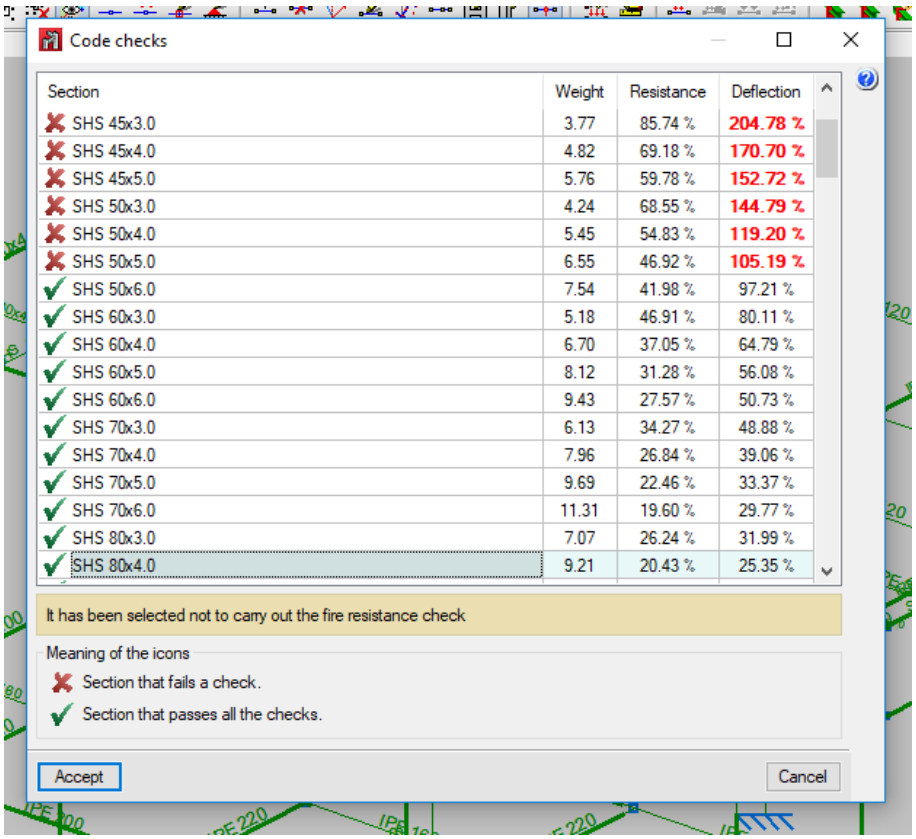

Section	Weight	Resistance	Deflection
SHS 45x3.0	3.77	85.74 %	204.78 %
SHS 45x4.0	4.82	69.18 %	170.70 %
SHS 45x5.0	5.76	59.78 %	152.72 %
SHS 50x3.0	4.24	68.55 %	144.79 %
SHS 50x4.0	5.45	54.83 %	119.20 %
SHS 50x5.0	6.55	46.92 %	105.19 %
SHS 50x6.0	7.54	41.98 %	97.21 %
SHS 60x3.0	5.18	46.91 %	80.11 %
SHS 60x4.0	6.70	37.05 %	64.79 %
SHS 60x5.0	8.12	31.28 %	56.08 %
SHS 60x6.0	9.43	27.57 %	50.73 %
SHS 70x3.0	6.13	34.27 %	48.88 %
SHS 70x4.0	7.96	26.84 %	39.06 %
SHS 70x5.0	9.69	22.46 %	33.37 %
SHS 70x6.0	11.31	19.60 %	29.77 %
SHS 80x3.0	7.07	26.24 %	31.99 %
SHS 80x4.0	9.21	20.43 %	25.35 %

Illustration 49 - Tube 80x4 checks [13]

This tube is very oversized, but we do not know what will hang from it, therefore we can proceed to oversize, as a 40mm tube already meets our demands in terms of resistance in several areas.

In addition, we need a good base to anchor the façade panels, and since the IPE 140 profile has a base of 73mm, we select the first similar profile that is superior in terms of base, since the difference in weight and price between a 70mm and an 80mm base is trivial.

Please see attached the list of results in the calculation annexes, section 7.

8.6 Deformed structure

This is the deformed structure under the set of actions of own weight, overload of use, wind and snow.

Under the simultaneous actions of these loads, the greatest possible deformation is obtained, and it meets the demands.

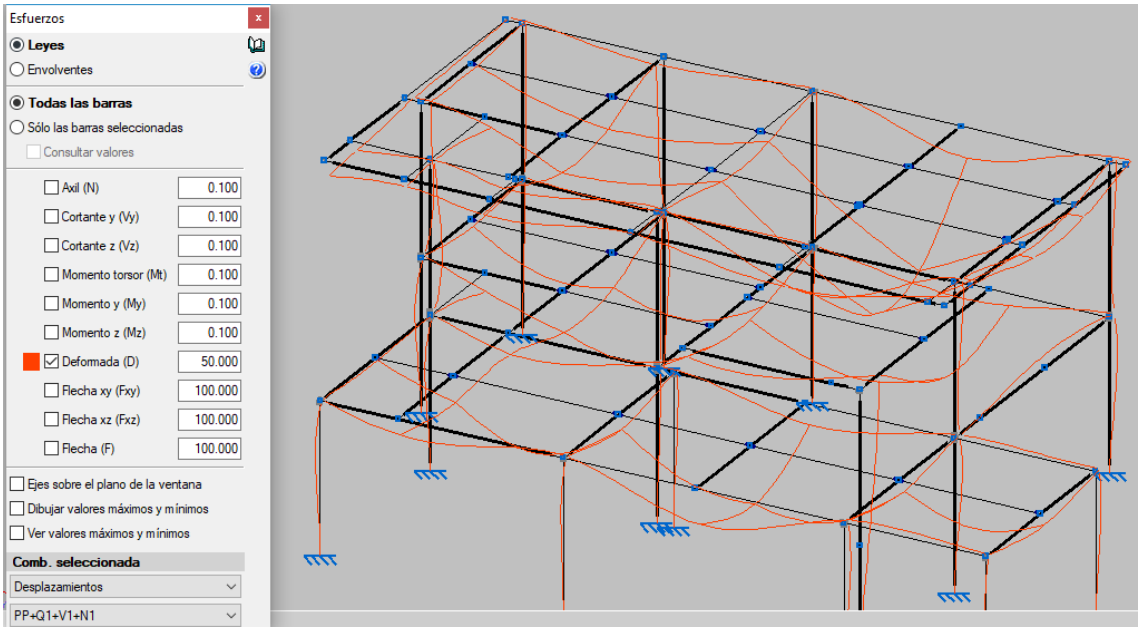

Illustration 50 - Deformed structure [13]

8.7 Main pillar displacement

The maximum tolerated displacement must be less than h/250.

Below are the results of the analysis of the most unfavourable pillar.

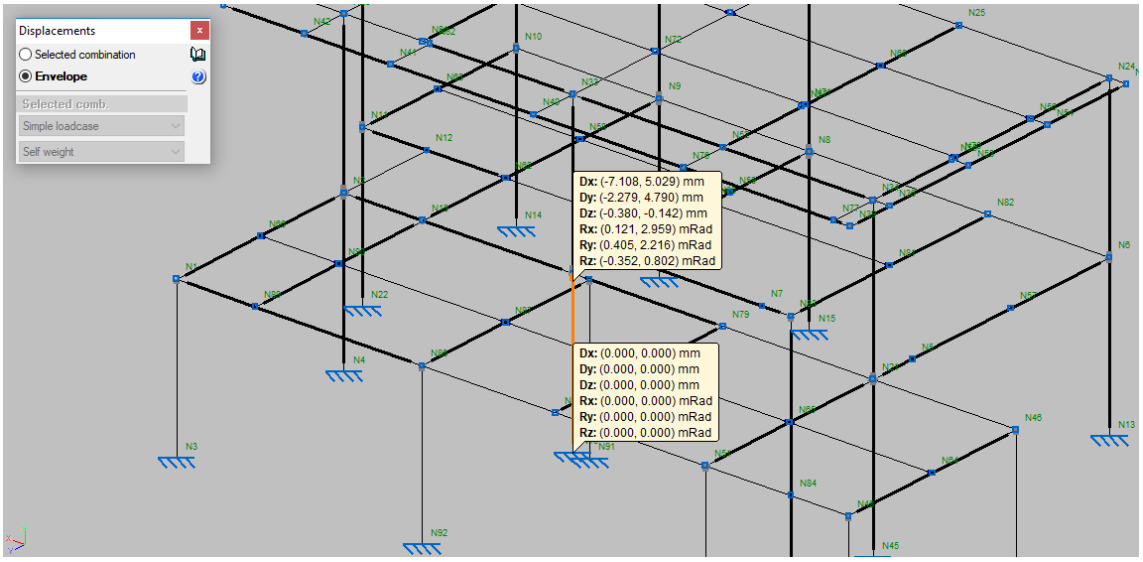

Illustration 51 - Pillar displacement 1 [13]

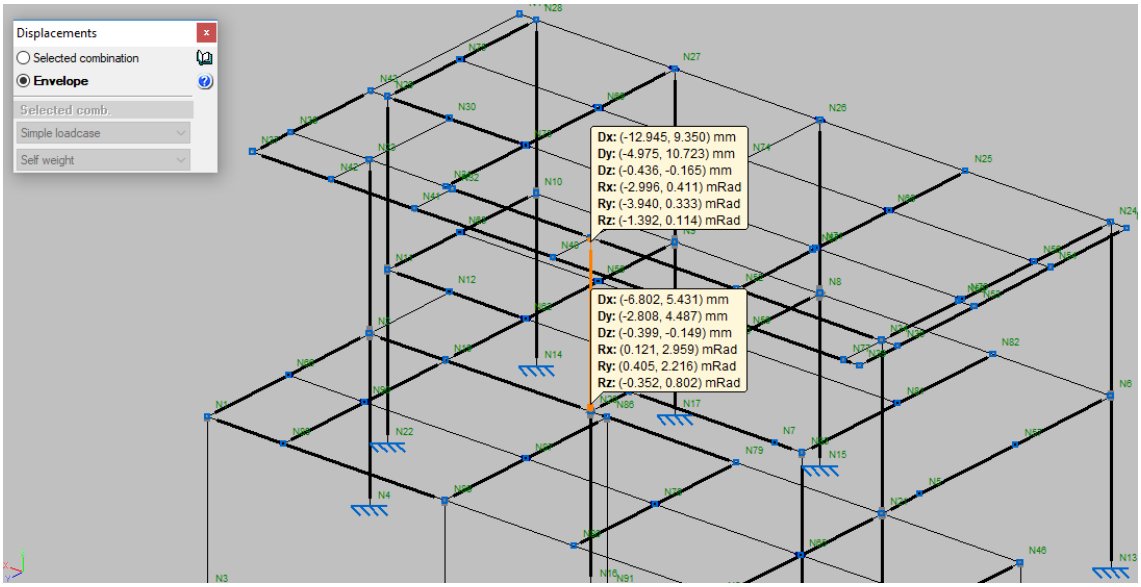

Illustration 52 - Pillar displacement 2 [13]

The results are valid within the established margin.

(7,108mm) < (h/250)

9. Changes made

The structure has been going through constant changes before its conclusion, some of them more important, some of them less. However, I would highlight the great change that was made once all was designed.

Firstly, the incorporation of the porch.

This is the first model that we did to present it.

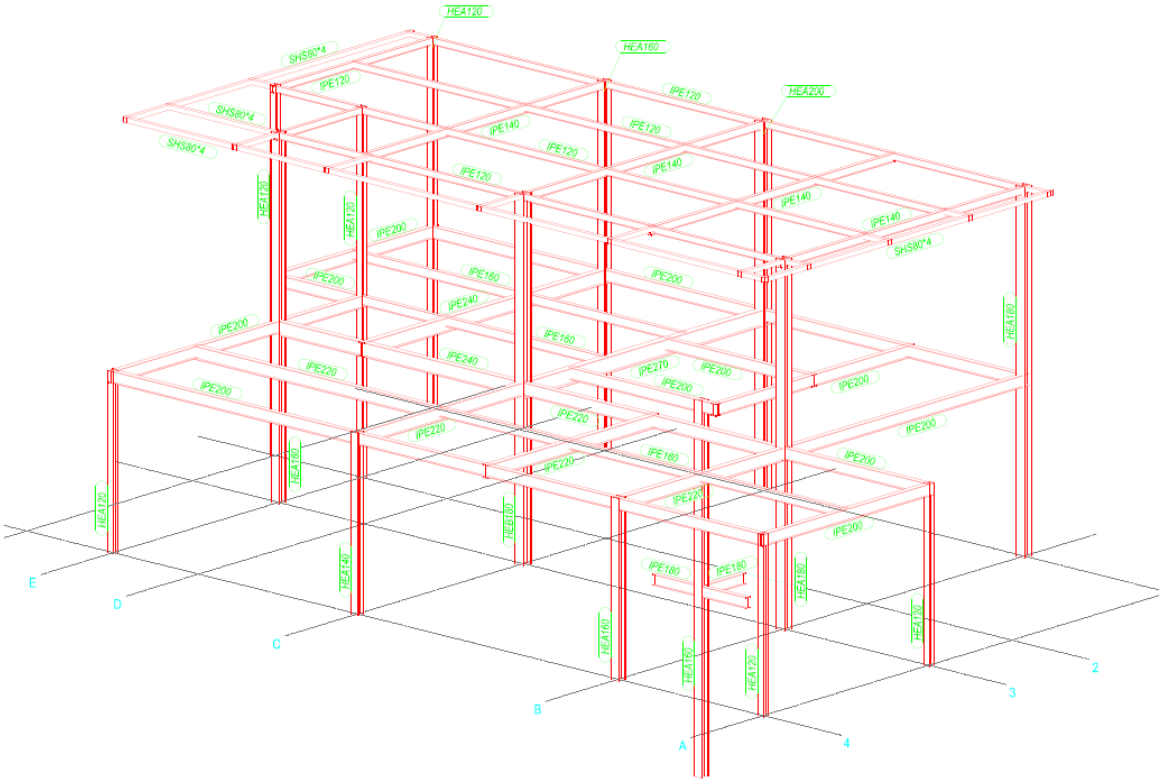

Illustration 53 - Structure 3D 1st option [13]

After this model, they changed it and included a porch, and we incorporated some extra joints to stiffen it. The joints were added in the cantilever of the main floor and in the upper floor.

You can find attached a picture of the 3D drawing, which shows how everything was distributed before the final changes.

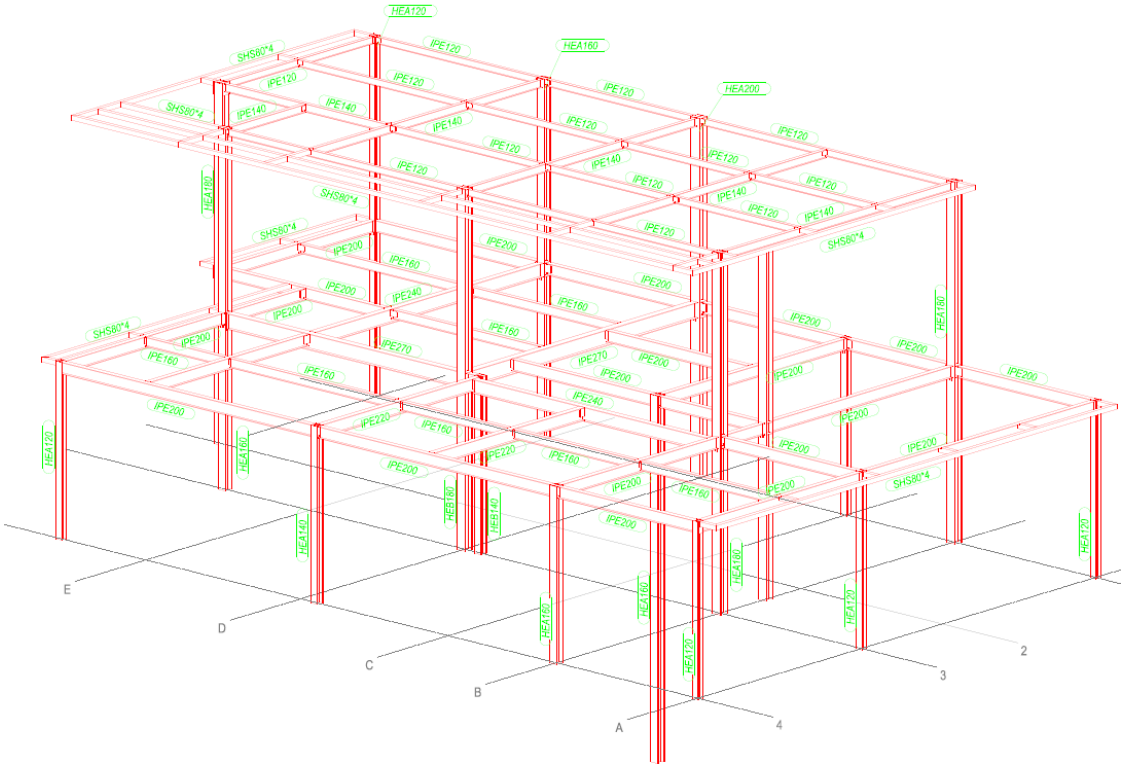

Illustration 54 - Structure 3D 2nd option [13]

By this moment, the structure was still very simple and had flat floors.

The whole distribution of the previously explained loads was made in accordance to these changes, but the upper cantilever was not rigid enough to withstand the loads of awnings and windows.

At that point, they made new heights for the cantilevers of the main and the upper floors, to raise the roof perimeter.

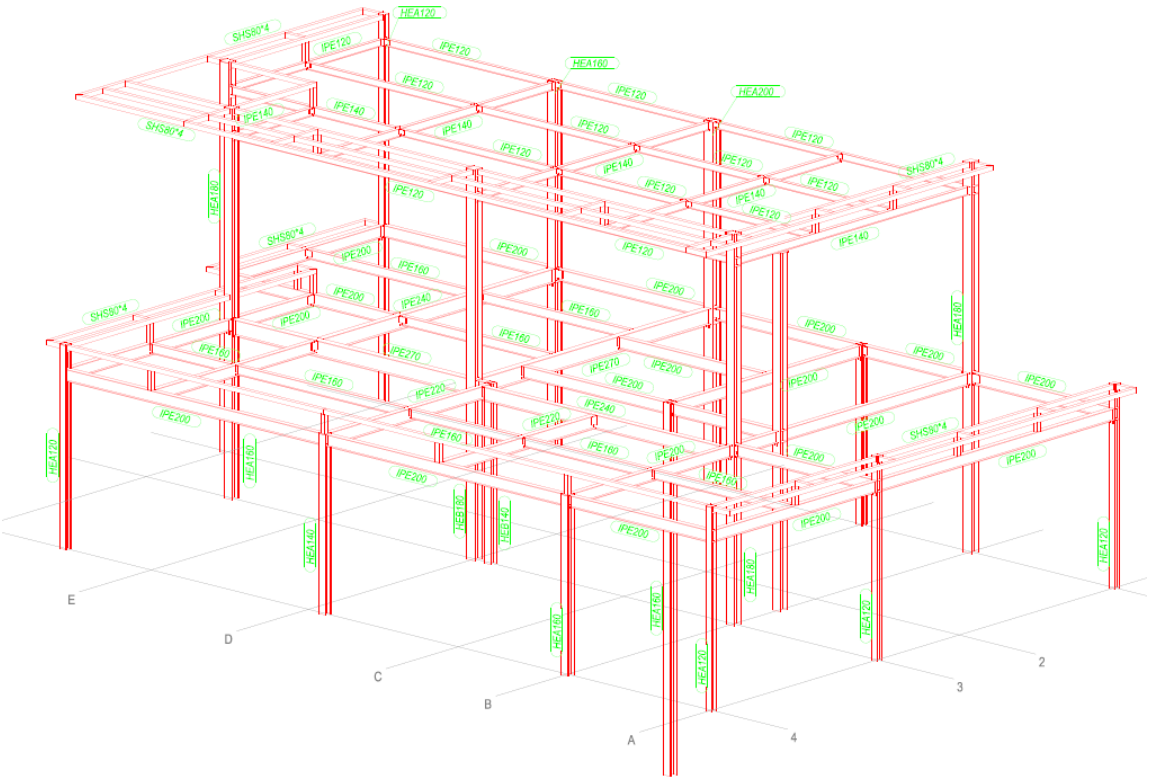

Illustration 55 - Structure 3D 3rd option [13]

Here you can find the final distribution. You can see the changes mentioned in the cantilevers (not only in rigidity, but also in height). In some of the pillars, a supplementary piece has been added. However, some other pillars have been modified to change the length of the profile.

10. Assembly

To start with the work, we went to calculate the topography levels to buy the initial pillars to the exact lenght measure. Once the measures were taken, we proceeded to desing and purchase the material.

Illustration 56 - Material on the site [13]

10.1 Process

The anchorage plaques were put with chemical HIT-HY 200-A by Hilti with threaded rod, washers and nuts. (Find attached a technical sheet in annexes)

This is the drawing design for the roof of pillars.

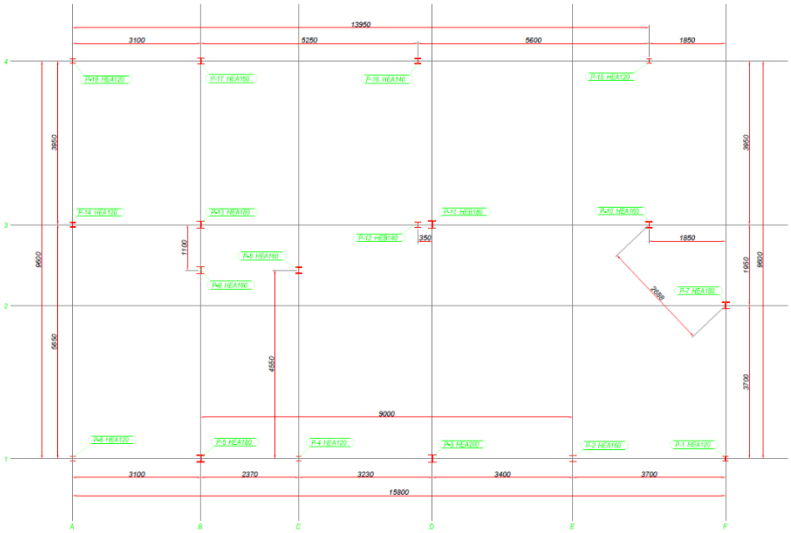

Illustration 57 - Pillars plan [13]

All the pillars have the same orientation. It is not mandatory to fulfill this method in the structures, because everything will depend on where to join the next beam.

However, as you can see in the following picture, adding some stiffeners can allow us to proceed to lengthen the wings of the beam.

Illustration 58 - Assembly process 1 [13]

The pillars and beams were made to measure, and all the pillars were assembled workshop, already incorporating stiffeners, connetion angle, transverse plates, etc.

Illustration 59 - Assembly process 2 [13]

The assemply was made with a truck crane for the pillars, and manually helped by platforms for the beams.

Illustration 60 - Assembly process 3 [13]

The joints have been solved by welding. There are different types of weldings inside the structure.

The weldings within pillars and main beams have been welded through all the perimeter. In the joints, it has only been welded the web of the beam.

Illustration 61 - Assembly process 4 [13]

This is the first floor without having made the height change in the perimeter and cantelivers

Actually, the structure has finished within the established deadlines.

Currently, the structure has been finished within the established deadlines. After finishing the structure, the company asked us to prepare an additional metallic part and the composite slab. This additional job will be included in the budget as an extra part.

11. Environmental impact

This section will summarise the environmental conditions generated by this structure: from the extraction of the raw material to the final product.

11.1 Environmental impact in the steelmaking process

11.1.1 Raw material treatment

During the steelmaking process, large quantities of wastewater and atmospheric emissions are generated. This wastewater has to be treated properly since it could potentially cause earth, water and air contamination. The use of blast furnaces for the treatment of iron generates particles that contain carbon monoxide. These blast furnaces also generate slag that once cooled by water, produces carbon monoxide and hydrogen sulphide.

All this is added to with the atmospheric emissions generated in the process and released into the environment through exhaust gases.

11.1.2 Steel Transformation

During the melting of steel, solid waste, gases and liquids are generated. Most solid waste can be recycled to generate other elements with subsequent proper processing. The liquid chemical products used to clean the steel must be carefully handled due to their high level of danger; the gases generated are carbon monoxide and sulphur dioxide.

11.1.3 Effects on the environment

Steel production also contributes to the depletion of major resources. Not all the material produced is used – an amount is transformed into gases and fumes from the factories where the welds are made, generating pollution in the atmosphere due to the exchange of temperatures with the ambient temperature, which on a small scale affects the greenhouse effect. Again, there is a moral dilemma to be discussed in terms of reconciling industrial and environmental interests, since a simple change in the material used would produce positive effects on the environment, but on an industrial level this would generate costs that would not be amortized over the years.

11.2 Environmental impact on assembly

During the last phase, there are several sources of emission, both in the material supply system and the on-site assembly. CO_2 emissions are produced during the transport of the steelworks to the factory where the pre-assembly of the pillars and main beams takes place, and then from the factory to the location where the assembly will take place.

Once on-site, welding gases and temperature rises occur in the temperature due to welding.

12. Planning

This is the planning that I used during the project, I will use a Gantt chart to try to be as explanatory as posible.

GANTT	W 31	W 32	W 33	W 34	W 35	W 36	W 37	W 38	W 39	W 40	W 41	W 42	W 43	W 44	W 45	W 46	W 47	W 48	W 49	W 50	W 51	W 52	W 1	W 2
Introduction																								
Project Justification																								
State of the art																								
Regulations																								C
Softwares																								H
Structual Design																								E
Calculation																								C
Changes Made																								K
Assembly																								
Environmental impact																								I
Budget																								T
Conclusions																								
Bibliography																								
Annexes																								

Table 1 - Gantt chart [13]

13. Conclusions

The objective of this project has been to cover both design and calculation of the structure, all helped by some partners, all the follow-up work has been carried out daily or weekly on some occasions by me.

The decision of choosing this project was thanks to the union within the engineering of metal structures and housings, a field which I had not studied in depth, and which I think it is a big step towards the future.

All the learning of the design program Autocad and Tekla Structures has been carried out in the company. During the university stage I have not been able to acquire knowledge of them, but other similar programs like Solidworks gave me an idea of how to model and work in 3 dimensions.

On the part of the calculation, during my academic stage I have been able to learn to calculate structures manually (on paper) and with finite element programs. However, all the calculations with a program dedicated to structures has had to be learnt during the project process, since I did not know how Cype3D worked.

I have learnt to calculate and design a metallic structure of these dimensions in its entirety, as well as being able to track and budget it.

This process of learning has given me a lot of knowledge about concepts which I will constantly use in my professional life, not only in the construction enviroment.

The calculation, design and budgets are daily tasks in the field of engineering, as well as the organization in the industrial environment, so this project has included the most favorable points to continue my growth as a professional in the world of engineering.

14. Future actions

As future actions we could consider studying the calculation of the foundations, the urban regulations and an exhaustive calculation of the roof area. All sanitary, electric and gas facilities would also be a broad object of study as a possible future action.

15. Bibliography

15.1 Main sources

CONSTRUIR CON ESTRUCTURAS METÁLICAS VS CONCRETO VENTAJAS E INCONVENIENTES | Available at: Linkedin (2017): https://www.linkedin.com/pulse/construir-con-estructuras-metálicas-vs-concreto-e-horacio-rodriguez

Perfiles estructurales y vigas | Available at: Hierros Mora Anton (no date): https://www.grupomora.com/hierros-mora-anton/productos-hierros/productos-largos/perfiles-estructurales-vigas

Perfiles y tubos | Available at: Aquitectura en acero (no date): http://www.arquitectura-enacero.org/uso-y-aplicaciones-del-acero/materiales/perfiles-y-tubos

Las normas de acero estructural aplicables en España | Available at: Arktec (2011): http://www.arktec.com/ES/Común/0_artículos/art_normasAcero.aspx

Medios de Unión de estructuras metálicas | Available at: UPM (2007): http://oa.upm.es/3786/1/Picazo-E15.pdf

Uniones y conexiones | Available at: Arquitectura en acero (no date): http://www.arquitecturaenacero.org/uso-y-aplicaciones-del-acero/solucionesconstructivas-/uniones-y-conexiones

Laminación en caliente | Available at: VisionTir (no date): https://visiontir.com/es/industrias/acero/laminacion-en-caliente/

Tipos de uniones soldadas | Available at: FEAndalucia (2010): https://www.feandalucia.cc-oo.es/docu/p5sd6731.pdf

Tornillos | Available at: Wikipedia (no date): https://es.wikipedia.org/wiki/Tornillo

Acero | Available at: Wikipedia (no date): https://es.wikipedia.org/wiki/Acero

Roblón | Available at: Wikipedia (no date): https://es.wikipedia.org/wiki/Robl%C3%B3n

Historia del ladrillo | Available at: Wikipedia (no date): https://es.wikipedia.org/wiki/Historia_del_ladrillo

Instrucción de Acero Estructural | Available at: Ministerio de fomento (2012): http://www.fomento.gob.es/AZ.BBMF.Web/documentacion/pdf/RE2360.pdf

Código técnico | Available at: CTE (no date): https://www.codigotecnico.org/images/stories/pdf/seguridadEstructural/DBSE-AE.pdf

Software para Arquitectura, Ingeniera y Construcción | Available at: Cype (no date): http://programas.cype.es/

Software BIM de Tekla Structures | Available at: Tekla (no date): https://www.tekla.com/l-a/productos/tekla-structures

Ignifugaciones generales | Available at: NTI (no date): https://www.nti.com.es/ignifugaciones-generales/

Ensayos no destructivos en la soldadura | Available at: FEAndalucia (2011): https://www.feandalucia.ccoo.es/docu/p5sd8259.pdf

15.2 Graphic content

[1] - Transmetal | Available at: http://www.transmetalsa.com/

[2] - Wikipedia | Available at: https://es.wikipedia.org/wiki/Historia_del_ladrillo

[3] – CAD Proyectos | Available at: http://www.cadproyectos.com/wp/products/software-para-ingenieria-y-arquitectura/cype/estructuras/cype-estructuras/uniones-atornilladas-para-naves-con-perfiles-laminados-y-armados-en-doble-t/

[4] – Ciencia Esfera | Available at: https://www.cienciasfera.com/materiales/tecnologia/tecno01/tema19/21_remaches_y_roblones.html

[5] – Construcciones 2SM | Available at: http://construcciones2sm.blogspot.com/2010/10/union-mediante-tornillos-de-alta.html

[6] – EM Quintana | Available at: http://www.emquintana.com/projectes.php?ln=es&cat=10

[7] – Grupo Mora | Available at: https://www.grupomora.com/hierros-mora-anton/productos-hierros/productos-largos/perfiles-estructurales-vigas

[8] – VisionTir | Available at: https://visiontir.com/es/industrias/acero/laminacion-en-caliente/

[9] – CRG2010 | Available at: http://crg2010.com/nuestrosservicios/impermeabilizacion/ignifugacion-con-mortero/

[10] - Arktec | Available at: http://www.arktec.com/ES/Común/0_artículos/art_normasAcero.aspx

[11] – Cype | Available at: http://programas.cype.es/

[12] - Tekla | Available at: https://www.tekla.com/la/productos/tekla-structures

[13] - Own source

[14] - Vazquez i Benages drawings

[15] - Hilti | Available at: https://www.hilti.com/anchor-fasteners/dispensers,-accessories,-testers/dispensers/r5250

UNIVERSITAT POLITÈCNICA DE CATALUNYA
BARCELONATECH
Escola Superior d'Enginyeries Industrial, Aeroespacial i Audiovisual de Terrassa

ESEIAAT

Degree in Mechanical Engineering

Study of design and calculation of the structure of a house in the municipality of Sant Cugat del Valles.

Budget

Author: Rubén Extremera Hidalgo
Tutor: Montserrat Sánchez Romero
Terrassa, January 10, 2019

Index

Index of illustrations

Table index

1. Budget

In this section we specify the economic calculation necessary to build the metal structure for a of these characteristics.

1.1 Material

Please find attached a list of material for the structure.

These components were sent to more than three companies for quoting; once we receive the quotes we attempted to negotiate a better price for them together with the firm Comercial de Laminados.

UDS.	CONCEP.	LONG	Esp.	CAL.	NOTAS	PESO TOTAL
4	HEA-120	3422		S-275JR	A MEDIDA	272,4
1	HEA-120	6522		S-275JR	A MEDIDA	129,8
1	HEA-140	3022		S-275JR	A MEDIDA	74,6
1	HEA-160	3022		S-275JR	A MEDIDA	91,9
1	HEA-160	6130		S-275JR	A MEDIDA	186,4
1	HEA-160	3030		S-275JR	A MEDIDA	92,1
1	HEA-160	6522		S-275JR	A MEDIDA	198,3
3	HEA-180	6522		S-275JR	A MEDIDA	694,6
1	HEA-200	6130		S-275JR	A MEDIDA	259,3
1	HEB-160	3030		S-275JR	A MEDIDA	129,1
1	HEB-180	6522		S-275JR	A MEDIDA	333,9
4	IPE-120	2721		S-275JR	A MEDIDA	113,2
2	IPE-120	3555		S-275JR	A MEDIDA	73,9
1	IPE-120	5405		S-275JR	A MEDIDA	56,2
1	IPE-120	3215		S-275JR	A MEDIDA	33,4
1	IPE-120	3625		S-275JR	A MEDIDA	37,7
2	IPE-120	3320		S-275JR	A MEDIDA	69,1
1	IPE-120	5075		S-275JR	A MEDIDA	52,8
1	IPE-120	5415		S-275JR	A MEDIDA	56,3
1	IPE-140	1835		S-275JR	A MEDIDA	23,7
1	IPE-140	5475		S-275JR	A MEDIDA	70,6
1	IPE-140	5535		S-275JR	A MEDIDA	71,4
1	IPE-140	5460		S-275JR	A MEDIDA	70,4
1	IPE-140	5577		S-275JR	A MEDIDA	71,9
1	IPE-140	3555		S-275JR	A MEDIDA	45,9
1	IPE-160	3637		S-275JR	A MEDIDA	57,5
1	IPE-160	1742		S-275JR	A MEDIDA	27,5
1	IPE-160	2992		S-275JR	A MEDIDA	47,3
1	IPE-160	3265		S-275JR	A MEDIDA	51,6
1	IPE-160	3585		S-275JR	A MEDIDA	56,6
1	IPE-160	2675		S-275JR	A MEDIDA	42,3
1	IPE-160	2345		S-275JR	A MEDIDA	37,1
1	IPE-200	3532		S-275JR	A MEDIDA	79,1
1	IPE-200	3012		S-275JR	A MEDIDA	67,5
1	IPE-200	3612		S-275JR	A MEDIDA	80,9
1	IPE-200	5475		S-275JR	A MEDIDA	122,6
1	IPE-200	3553		S-275JR	A MEDIDA	79,6
1	IPE-200	3832		S-275JR	A MEDIDA	85,8
1	IPE-200	3813		S-275JR	A MEDIDA	85,4
1	IPE-200	4418		S-275JR	A MEDIDA	99,0
1	IPE-200	5532		S-275JR	A MEDIDA	123,9
1	IPE-200	3210		S-275JR	A MEDIDA	71,9
2	IPE-200	3002		S-275JR	A MEDIDA	134,5
1	IPE-200	5400		S-275JR	A MEDIDA	121,0
1	IPE-200	3108		S-275JR	A MEDIDA	69,6
1	IPE-200	5522		S-275JR	A MEDIDA	123,7
1	IPE-200	1820		S-275JR	A MEDIDA	40,8
1	IPE-200	5092		S-275JR	A MEDIDA	114,1
1	IPE-200	3076		S-275JR	A MEDIDA	68,9
1	IPE-220	3635		S-275JR	A MEDIDA	95,2
1	IPE-220	3800		S-275JR	A MEDIDA	99,6
1	IPE-220	175		S-275JR	A MEDIDA	4,6
1	IPE-220	3785		S-275JR	A MEDIDA	99,2
1	IPE-220	3825		S-275JR	A MEDIDA	100,2
1	IPE-240	5135		S-275JR	A MEDIDA	157,6
1	IPE-240	5500		S-275JR	A MEDIDA	168,9
1	IPE-270	5460		S-275JR	A MEDIDA	197,1
1	IPE-270	5058		S-275JR	A MEDIDA	182,6
22	SHS80*4	6000		S-275JR	A MEDIDA	

Illustration 1 - Material list. Own source

After that we proceeded to confirm this order with the previously established prices.

- All beams are made of steel with 275 quality as this is the limit of elasticity that we consider in the calculations within Cype3D.
- The budget of composite slab will be invoiced in other budget items too.
- The budget for the sheet metal is separate from the composite slab so as to avoid confusion between the linear meters of the sheet metal and the square meters of the composite slab.

The total weight of the material relating to hot laminated profiles is 6,302.1kg. The weight of tensors, anchor plates and other elements added to the structure must also be considered and invoiced accordingly.

The structure weight a total of 6661,9kg.

1.2 Processing cost

This is the cost of the preparation of the project, from the completion of the Project Charter to daily follow-up of the work, ending with the preparation of the documentation.

Concept	Units (hours)	Cost per unit (€/h)	Total cost
Preparation of the Project Charter	10	10	100,00 €
Search of information	45	10	450,00 €
Structure design	120	10	1.200,00 €
Choice of materials and profiles	20	10	200,00 €
Calculation of the structure	90	10	900,00 €
Manufacturing and assembly follow-up.	30	10	300,00 €
Project documentation	200	10	2.000,00 €
Total	515	10	**5.150,00 €**

Table 1 - Processing cost. Own source

The total calculation of this part is **€5,150.00**.

1.3 Cost of materials

In this table we introduce the price of the materials, both laminated profiles and tensors, the collaborative sheet and the perimetric topping frame.

Concept	Units	Cost (€/ud)	Total cost
Metallic structure (kg)	6661,9	0,85	5.662,62 €
Supply composite slab 0,75 (m2)	110	12,65	1.391,50 €
Galvanized sheet metal 1,2 (m)	65	4,1	266,50 €
Total			**7.320,62 €**

Table 2 - Cost of the material. Own source

The price of a kilo of steel is €0.85, the rest of the components are on-site supplies for subsequent assembly.

The total calculation of this part is **€7,320.62**.

1.4 Business profit

We will establish a **20%** business profit, calculated as 10% to cover the general expenses of the company, and a 10% of net profit.

In these small works the benefit is very small; we therefore currently carry out an assembly where we can extract a greater profit from the labour force, since the supply of materials does not cover large expenses.

1.5 Total cost of the project

Finally, here is a summary including the business profit.

Concept	Total cost
Processing cost	5.150,00 €
Cost of the material	7.320,62 €
Business profit	20%
Total	**14.964,74 €**

Table 3 - Cost of the project. Own source

The total cost of this project is **fourteen thousand nine hundred sixty-four euros and seventy-four cents (€14.964,74)**.

UNIVERSITAT POLITÈCNICA DE CATALUNYA
BARCELONATECH
Escola Superior d'Enginyeries Industrial, Aeroespacial i Audiovisual de Terrassa

ESEIAAT

Degree in Mechanical Engineering

Study of design and calculation of the structure of a house in the municipality of Sant Cugat del Valles.

Drawings

Author: Ruben Extremera Hidalgo
Tutor: Montserrat Sánchez Romero
Terrassa, January 10, 2019

Index

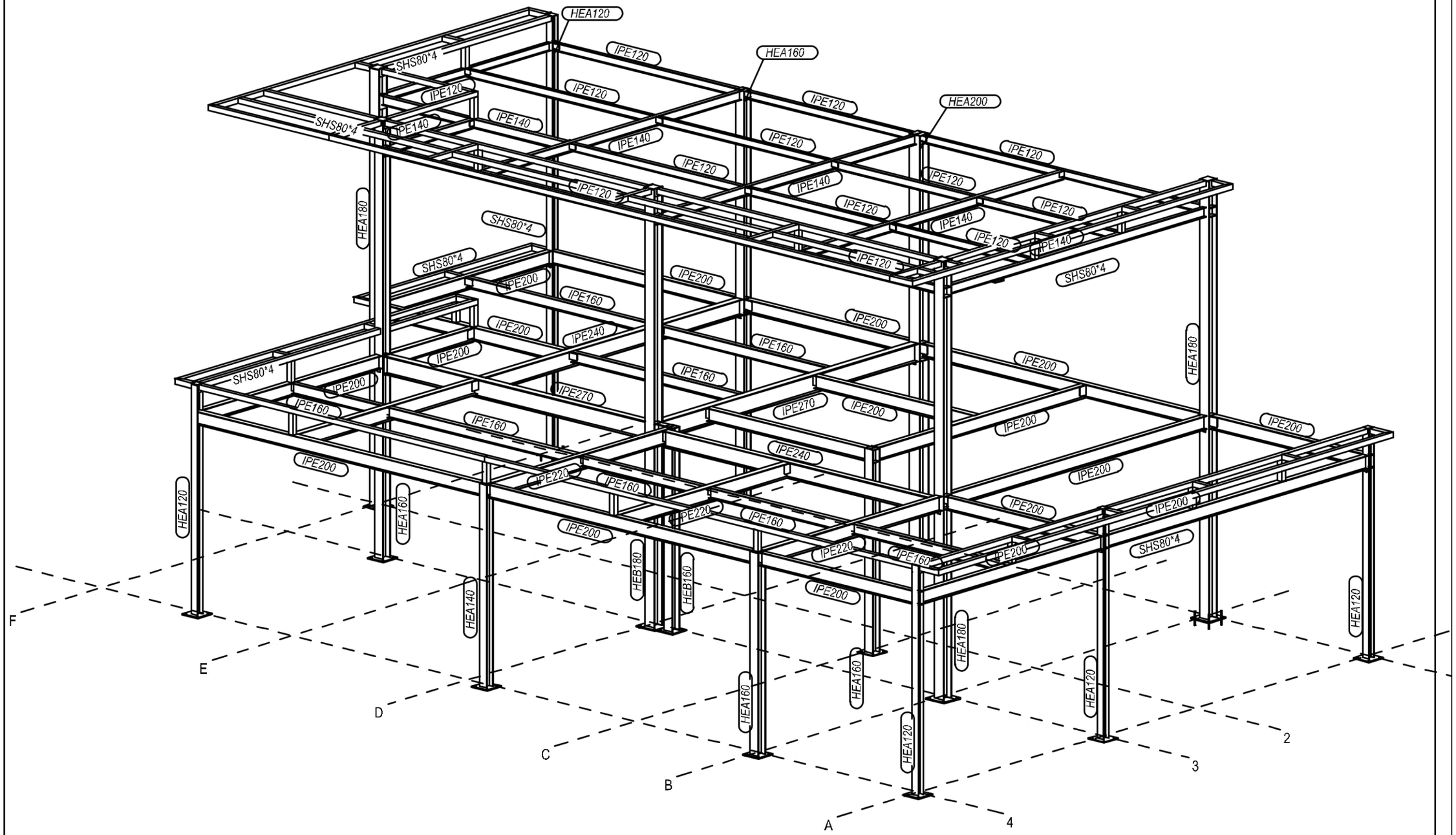

3d
1:50

Tekla Structures

Firma Soldadores	
Nº Letra hilo de soldar	
Dibujado:	Hubert Estremera
Fecha:	05.11.2018
Escala:	Ver vista

TITULO DIBUJO
3d ESTRUCTURA (Perfiles)

Nº rev.	Revision	Descripción de revisión	Fecha revisión

MATERIAL S275JR, SALVO INDICACION — SOLDADURAS
VER PROCEDIMIENTO MARCADO CEE, CORTE, TALADRO Y SOLDADURA — PROYECCIÓN

UNIVERSITAT POLITÈCNICA DE CATALUNYA
BARCELONATECH
Escola Superior d'Enginyeries Industrial, Aeroespacial i Audiovisual de Terrassa

PROYECTO Nº: 18-509
DIBUJO: 18-509/1

CE 1035

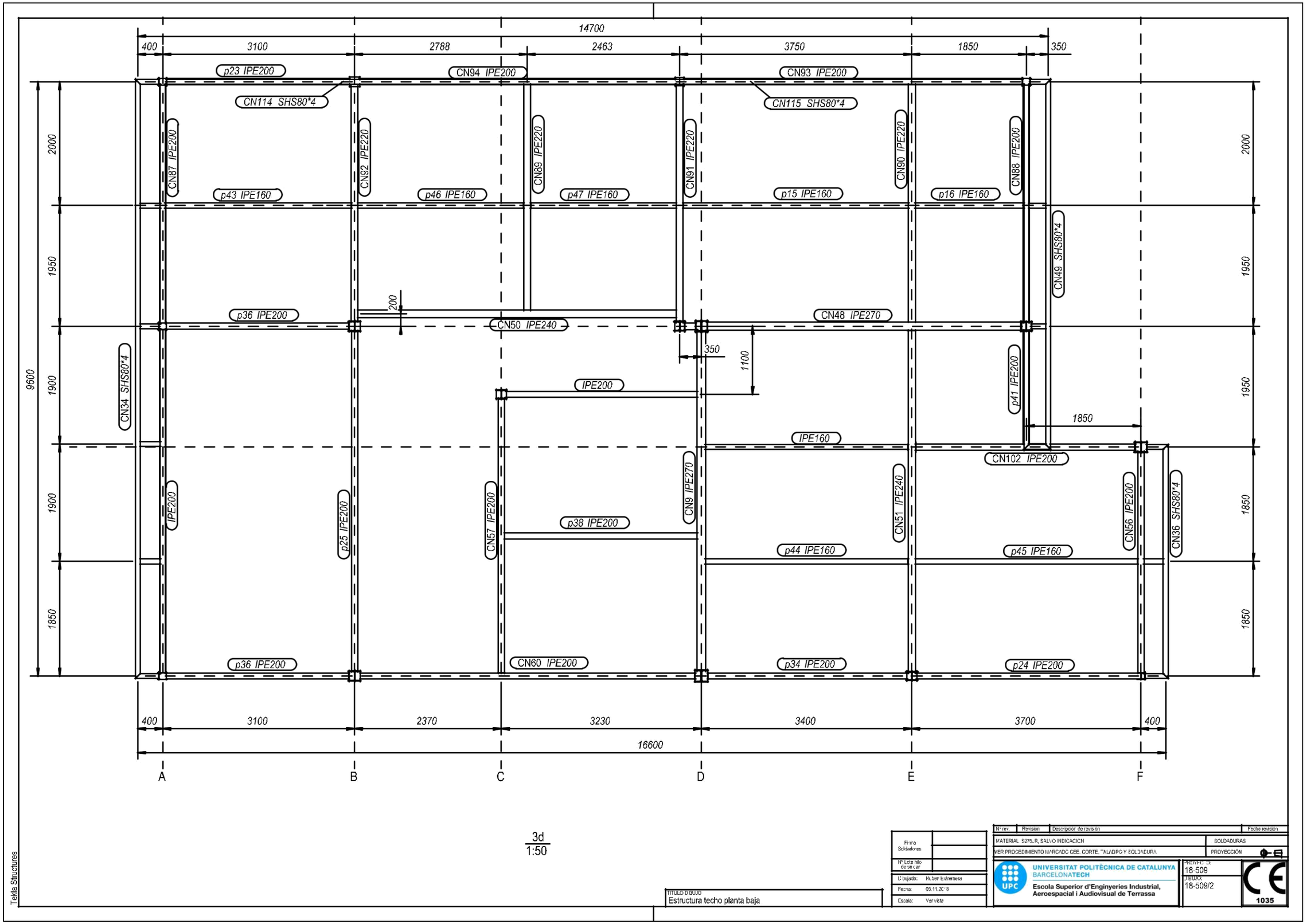
14700
400
3100
2788
2463
3750
1850
350
p23 IPE200
CN94 IPE200
CN93 IPE200
CN114 SHS80*4
CN115 SHS80*4
CN87 IPE200
CN92 IPE220
CN89 IPE220
CN91 IPE220
CN90 IPE220
CN88 IPE200
p43 IPE160
p46 IPE160
p47 IPE160
p15 IPE160
p16 IPE160
CN49 SHS80*4
p36 IPE200
CN50 IPE240
CN48 IPE270
200
350
1100
IPE200
p41 IPE200
1850
IPE160
CN102 IPE200
CN34 SHS80*4
9600
2000
1950
1900
1850
IPE200
p25 IPE200
CN57 IPE200
p38 IPE200
CN9 IPE270
CN51 IPE240
CN56 IPE200
CN36 SHS80*4
p44 IPE160
p45 IPE160
p36 IPE200
CN60 IPE200
p34 IPE200
p24 IPE200
400
3100
2370
3230
3400
3700
400
16600
A
B
C
D
E
F
3d
1:50
Tekla Structures
Firma Soldadores
Nº Lote hilo de soldar
Dibujado: Nuber Extremera
Fecha: 05.11.2018
Escala: Ver vista
TITULO DIBUJO
Estructura techo planta baja
Nº rev.
Revisión
Descripción de revisión
Fecha revisión
MATERIAL S275JR, SALVO INDICACIÓN
SOLDADURAS
VER PROCEDIMIENTO MARCADO CEE, CORTE, TALADRO Y SOLDADURA
PROYECCIÓN
UNIVERSITAT POLITÈCNICA DE CATALUNYA
BARCELONATECH
Escola Superior d'Enginyeries Industrial, Aeroespacial i Audiovisual de Terrassa
PROYECTO
18-509
DIBUJO
18-509/2
CE
1035

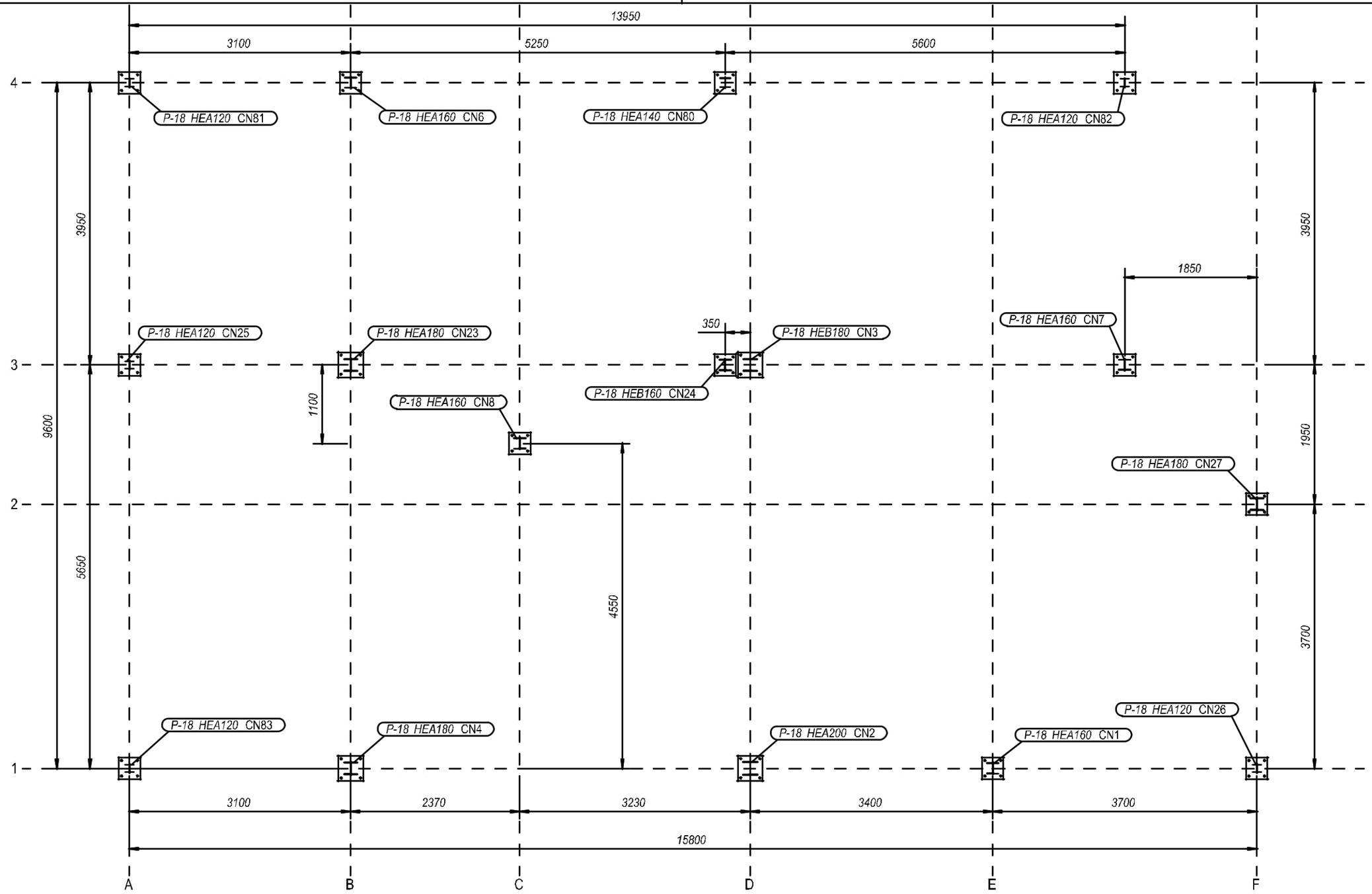

Tekla Structures

Firma Soldadores	
Nº Lote hilo de soldar	
Dibujado:	Nuber Extremera
Fecha:	05.11.2018
Escala:	Ver vista

TITULO DIBUJO
Planta pilares

Nº rev.	Revisión	Descripción de revisión	Fecha revisión

MATERIAL S275JR, SALVO INDICACION — SOLDADURAS
VER PROCEDIMIENTO MARCADO CEE, CORTE, TALADRO Y SOLDADURA — PROYECCIÓN

UNIVERSITAT POLITÈCNICA DE CATALUNYA
BARCELONATECH
Escola Superior d'Enginyeries Industrial, Aeroespacial i Audiovisual de Terrassa

PROYECTO: 18-509
DIBUJO: 18-509/3

1035

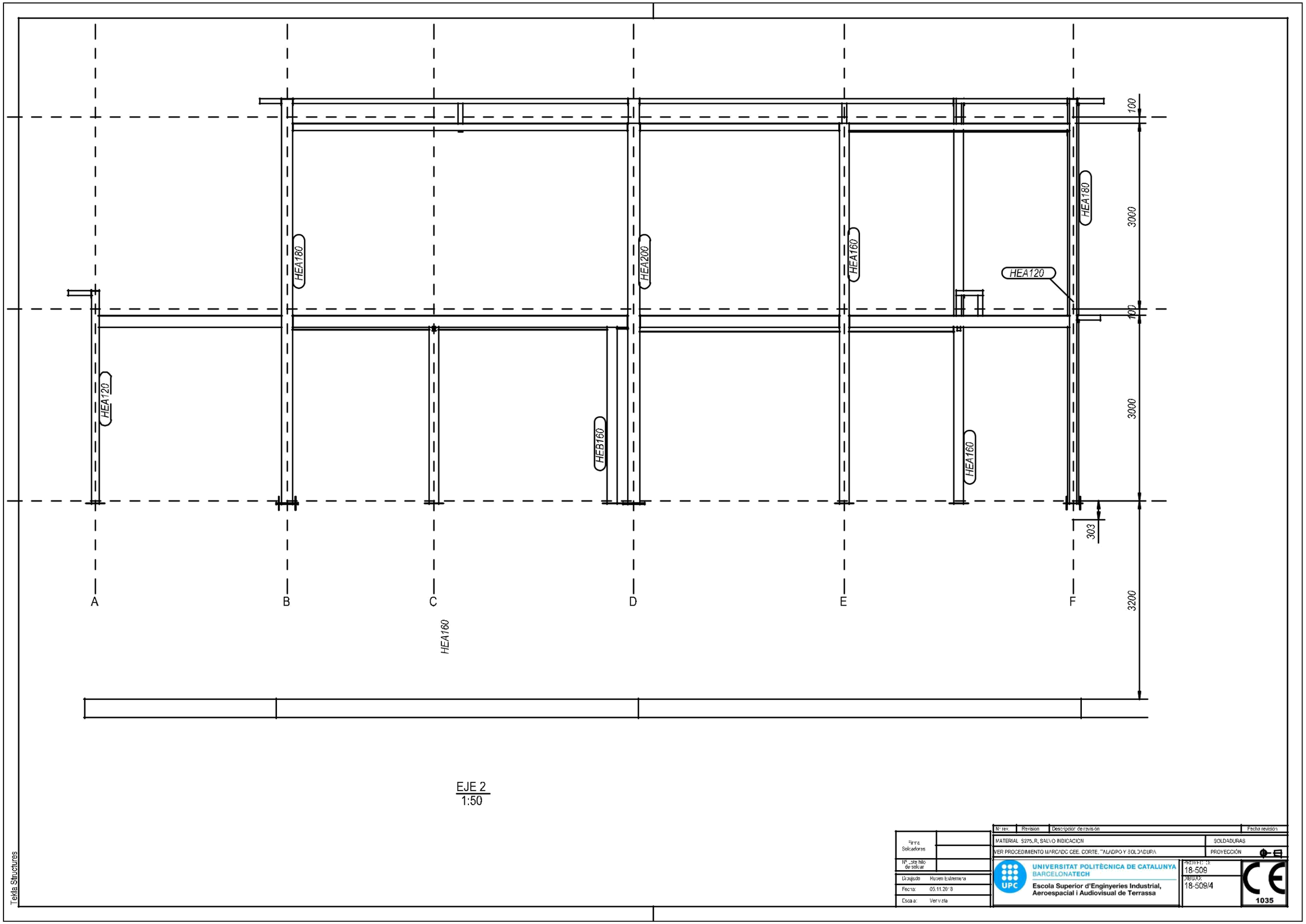
HEA180
HEA200
HEA160
HEA180
HEA120
HEA120
HEB160
HEA160
HEA160
100
3000
100
3000
303
3200
A
B
C
D
E
F
Tekla Structures
EJE 2
1:50
Firma Soldadores
Nº cate hilo de soldar
Dibujado Ruben Extremera
Fecha: 05.11.2018
Escala: Ver vista
Nº rev. | Revisión | Descripción de revisión | Fecha revisión
MATERIAL S275JR, SALVO INDICACIÓN
SOLDADURAS
VER PROCEDIMIENTO MARCADO CEE, CORTE, TALADRO Y SOLDADURA
PROYECCIÓN
UNIVERSITAT POLITÈCNICA DE CATALUNYA
BARCELONATECH
Escola Superior d'Enginyeries Industrial, Aeroespacial i Audiovisual de Terrassa
PROYECTO: 18-509
DIBUJO: 18-509/4
1035

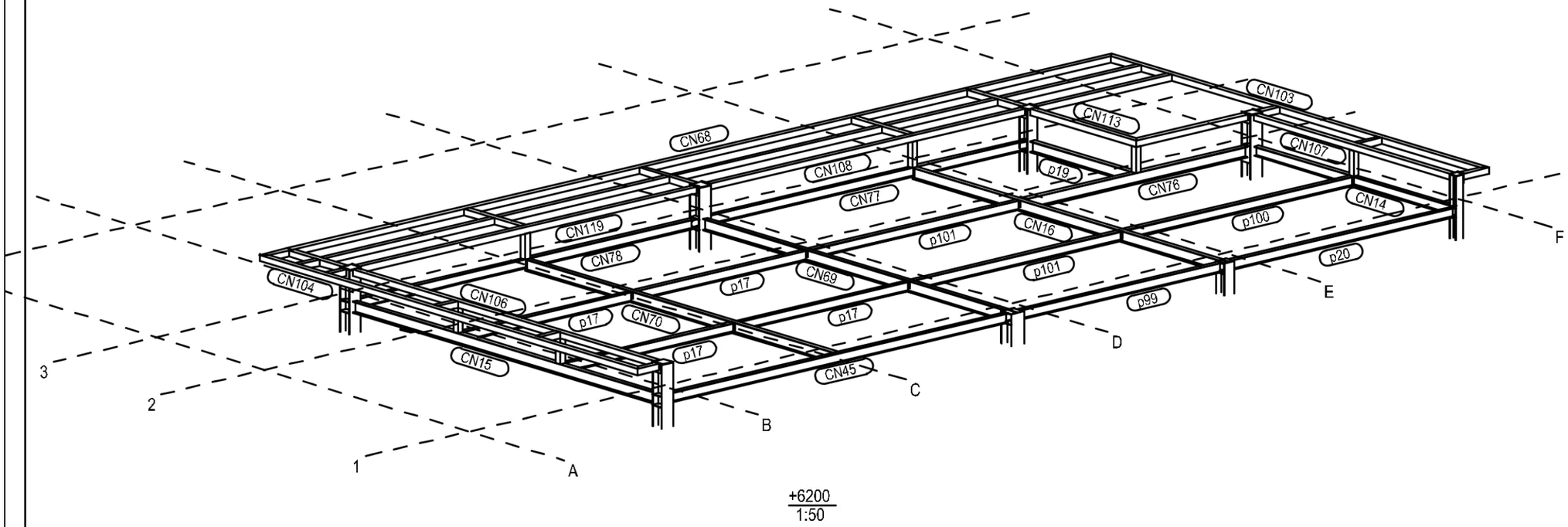

Tekla Structures

Firma Soldadores	
Nº Lote hilo de soldar	
Dibujado:	Ruben Extremera
Fecha:	05.11.2018
Escala:	Ver vista

TITULO DIBUJO
3d Montaje techo Planta 1ra

Nº rev.	Revisión	Descripción de revisión	Fecha revisión

MATERIAL S275JR, SALVO INDICACION	SOLDADURAS
VER PROCEDIMIENTO MARCADO CEE, CORTE, TALADRO Y SOLDADURA	PROYECCIÓN

UNIVERSITAT POLITÈCNICA DE CATALUNYA
BARCELONATECH
Escola Superior d'Enginyeries Industrial, Aeroespacial i Audiovisual de Terrassa

PROYECTO: 18-509
DIBUJO: 18-509/5

CE 1035

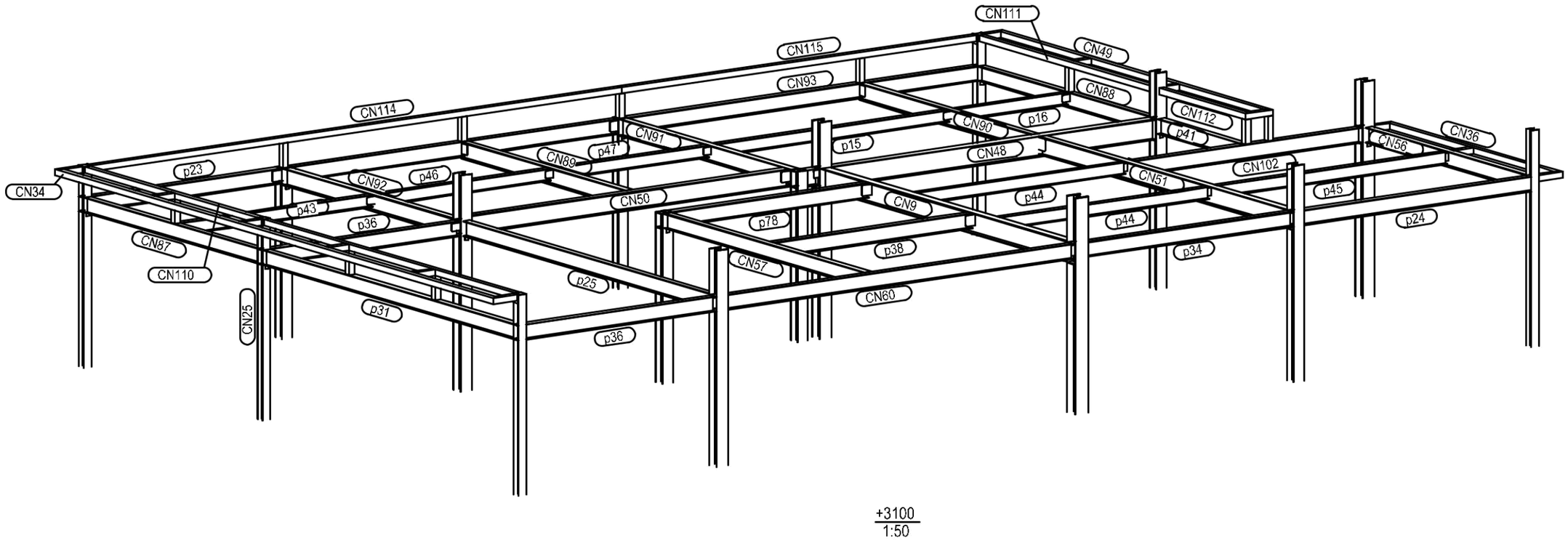

Tekla Structures

Firma Soldadores	
Nº Lote hilo de soldar	
Dibujado:	Roberto Gutiérrez
Fecha:	05.11.2018
Escala:	Ver vista

TITULO DIBUJO
3d Montaje techo Planta baja

Nº rev.	Revisión	Descripción de revisión	Fecha revisión

MATERIAL S275JR, SALVO INDICACION — SOLDADURAS
VER PROCEDIMIENTO MARCADO CEE, CORTE, TALADRO Y SOLDADURA — PROYECCIÓN

UNIVERSITAT POLITÈCNICA DE CATALUNYA
BARCELONATECH
Escola Superior d'Enginyeries Industrial, Aeroespacial i Audiovisual de Terrassa

PROYECTO: 18-509
DIBUJO: 18-509/9

CE 1035

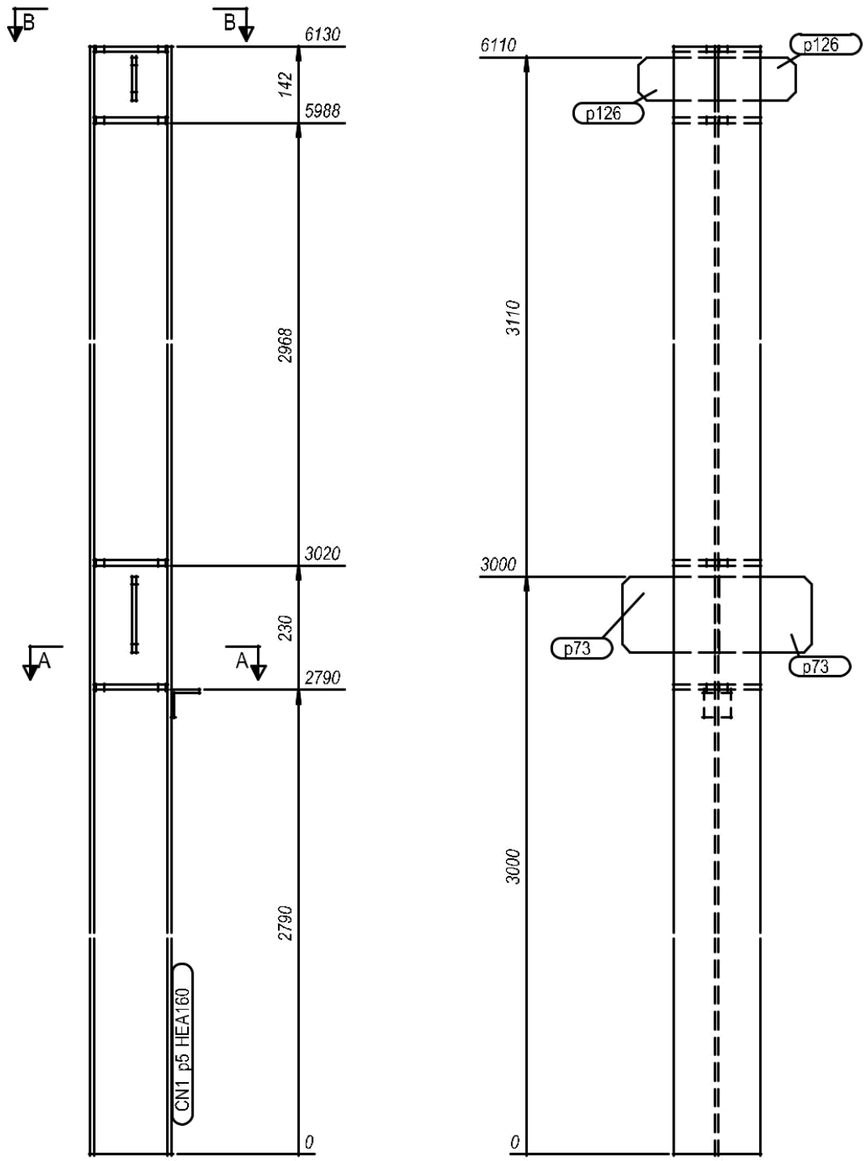

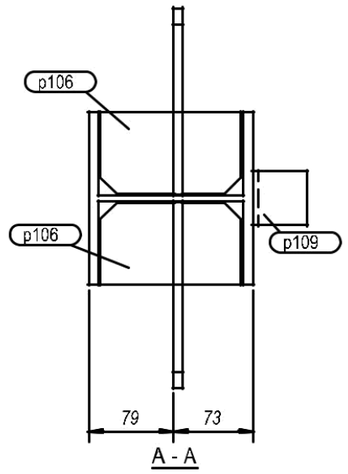

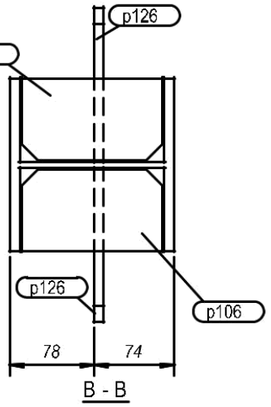

LISTA DE PARTES DE CONJUNTO

Conjunto: CN1 Número: 1

Acabado: Long. (mm): 6130

Parte	Perfil	Material	Número	Long. (mm)	Peso (kg)
p5	HEA160	S275JR	1	6130	186.6
p73	PL140*8	S275JR	2	173	3.0
p106	PL10*76	S275JR	8	130	6.1
p109	L50*5	S275JR	1	50	0.2
p126	PL80*8	S275JR	2	143	1.4
			Total por conjunto		197.2

Tekla Structures

Firma Soldadores	
Nº Lote hilo de soldar	
Dibujado:	Gabriel Extremera
Fecha:	05.11.2018
Escala	1:5

Nº rev.	Revisión	Descripción de revisión	Fecha revisión

MATERIAL: S275JR, SALVO INDICACIÓN — SOLDADURAS

VER PROCEDIMIENTO MARCADO CEE, CORTE, TALADRO Y SOLDADURA — PROYECCIÓN

UNIVERSITAT POLITÈCNICA DE CATALUNYA
BARCELONATECH
Escola Superior d'Enginyeries Industrial, Aeroespacial i Audiovisual de Terrassa

PROYECTO: 18-509

DIBUJO: 18-509/CN1

CE 1035

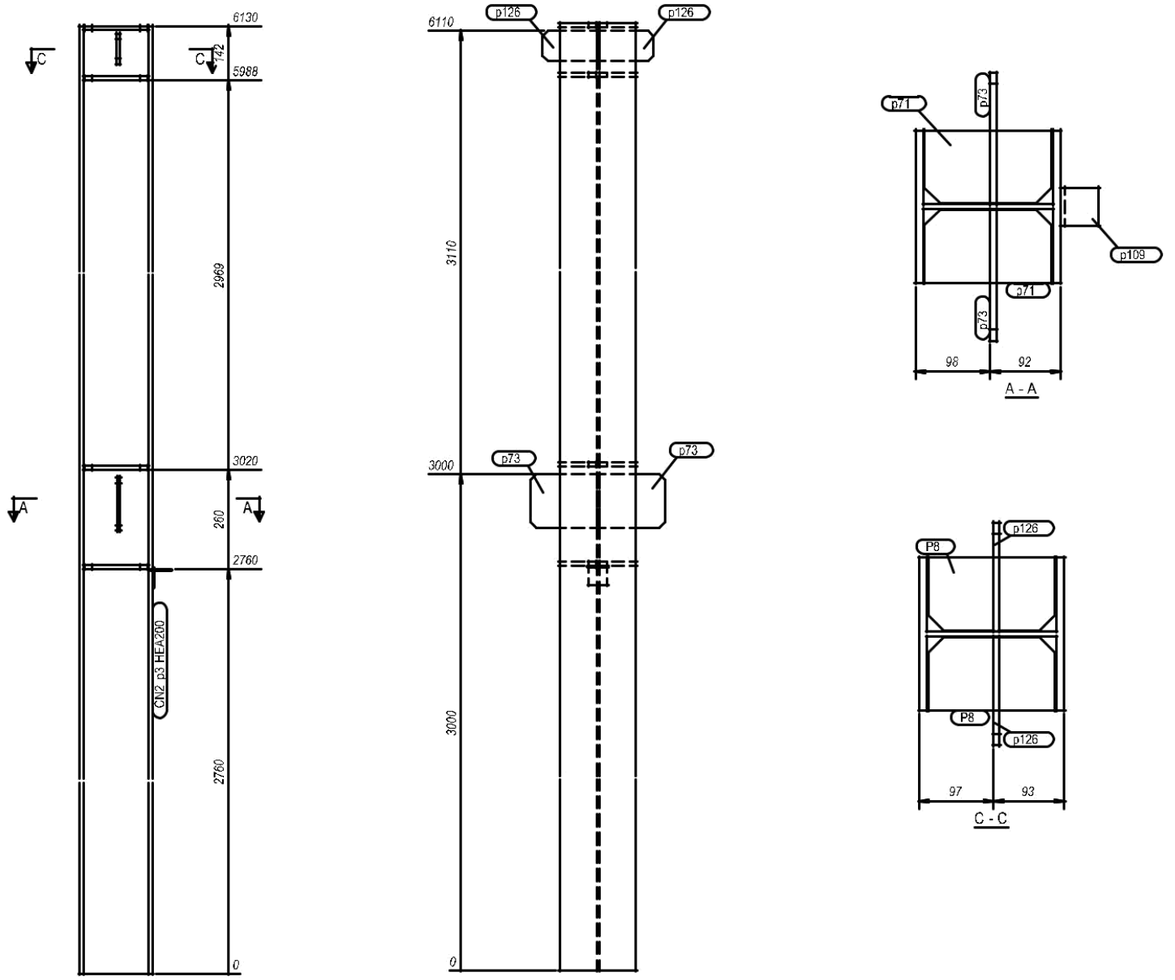

LISTA DE PARTES DE CONJUNTO

Conjunto: CN2 Número: 1

Acabado: Long. (mm): 6130

Parte	Perfil	Material	Número	Long. (mm)	Peso (kg)
P8	PL10*96	S275JR	4	166	4.9
p3	HEA200	S275JR	1	6130	259.0
p71	PL10*96	S275JR	4	166	4.9
p73	PL14*8	S275JR	2	173	3.0
p109	L50*5	S275JR	1	50	0.2
p126	PL80*8	S275JR	2	173	1.4
			Total por conjunto		272.4

Tek-a Structures

Nº rev.	Revisión	Descripción de revisión	Fecha revisión

MATERIAL: S275JR, SALVO INDICACIÓN — SOLDADURAS

VER PROCEDIMIENTO MARCADO CEE, CORTE, TALADRO Y SOLDADURA — PROYECCIÓN

Forma Soldaduras

Material de aportación

Dibujado: Nuria Ribas

Fecha: 06.11.2018

Escala: 1:5

UNIVERSITAT POLITÈCNICA DE CATALUNYA
BARCELONATECH

Escola Superior d'Enginyeries Industrial, Aeroespacial i Audiovisual de Terrassa

PROYECTO: 18-509

DIBUJO: 18-509/CN2

CE 1035

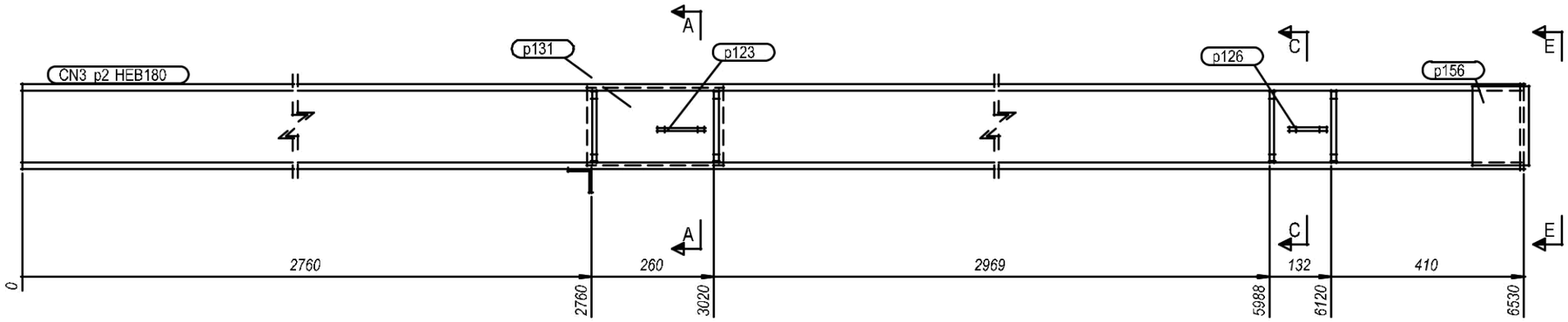

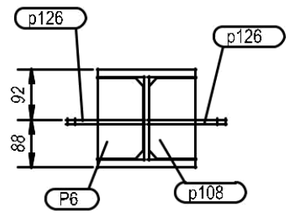

C - C

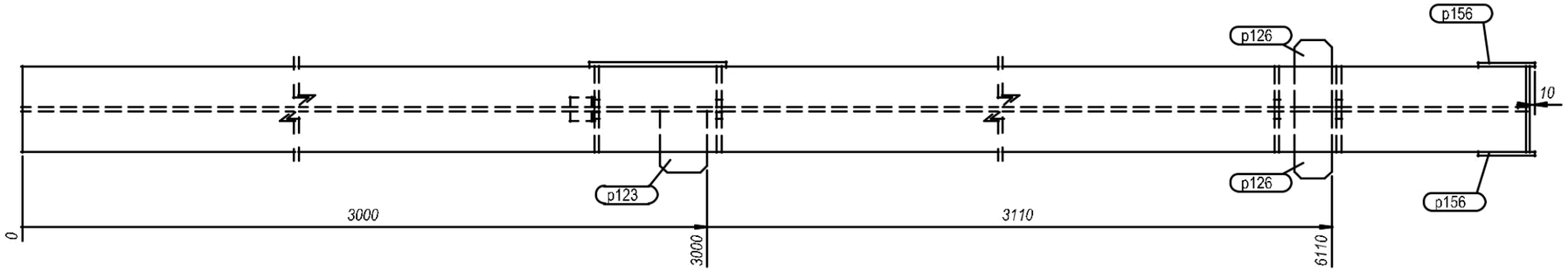

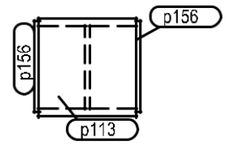

E - E

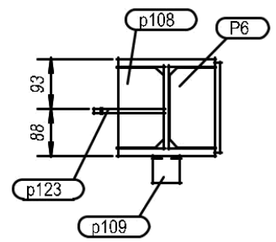

A - A

LISTA DE PARTES DE CONJUNTO

Conjunto: CN3 Número: 1

Acabado: Long. (mm): 6540

Parte	Perfil	Material	Número	Long. (mm)	Peso (kg)
P6	PL10*85	S275JR	4	148	3.9
p2	HEB180	S275JR	1	6522	334.1
p108	PL10*85	S275JR	4	148	3.9
p109	L50*5	S275JR	1	50	0.2
p113	PL180*8	S275JR	1	181	2.0
p123	PL130*8	S275JR	1	100	0.8
p126	PL80*8	S275JR	2	143	1.4
p131	PL290*10	S275JR	1	166	3.8
p156	PL120*8	S275JR	2	168	2.5
			Total por conjunto		352.6

Tekla Structures

Firma Soldadores	
Nº Lote hilo de soldar	
Dibujado:	Yolben Exximenea
Fecha:	05.11.2018
Escala	1:10

Nº rev.	Revisión	Descripción de revisión	Fecha revisión

MATERIAL: S275JR, SALVO INDICACIÓN — SOLDADURAS

VER PROCEDIMIENTO MARCADO CEE, CORTE, TALADRO Y SOLDADURA — PROYECCIÓN

UNIVERSITAT POLITÈCNICA DE CATALUNYA
BARCELONATECH
Escola Superior d'Enginyeries Industrial, Aeroespacial i Audiovisual de Terrassa

PROYECTO: 18-509
DIBUJO: 18-509/CN3

CE 1035

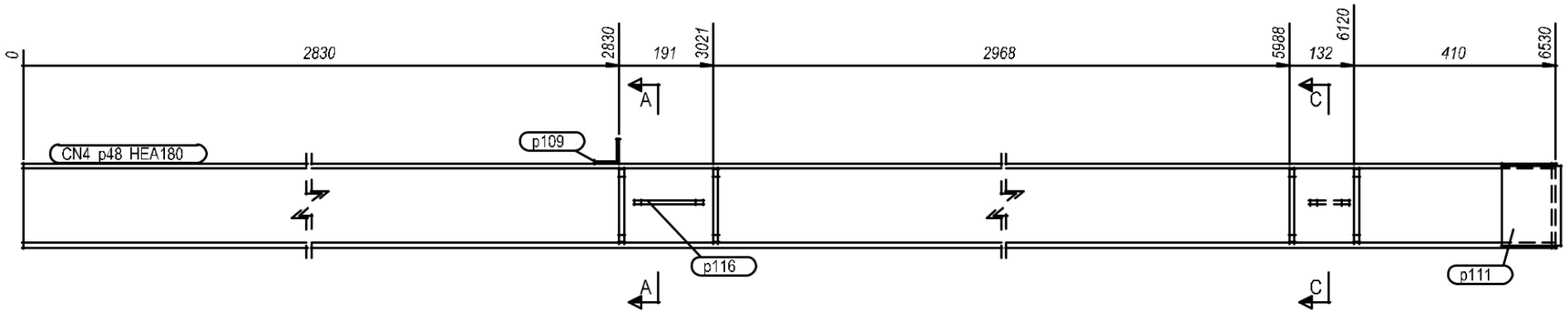

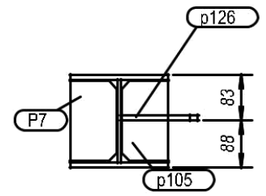

C - C

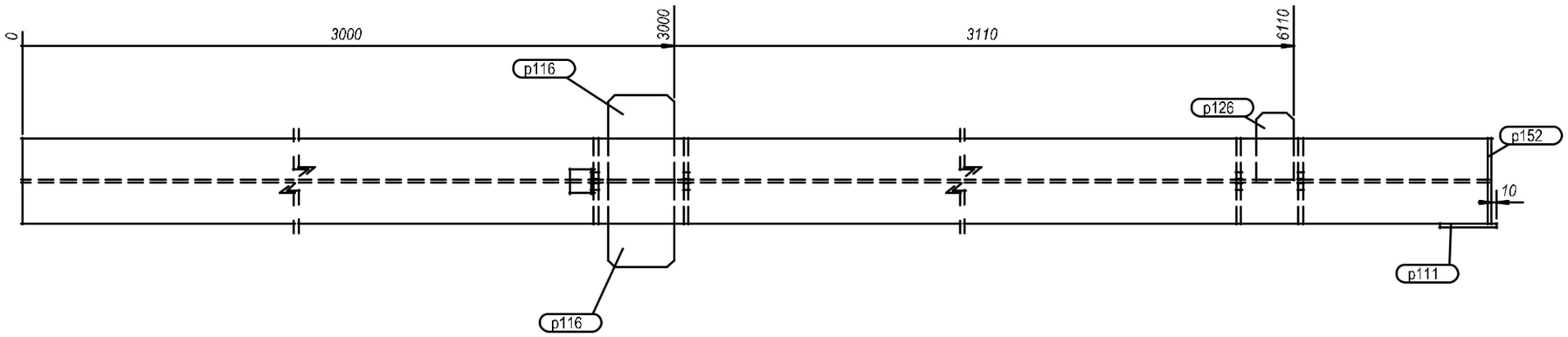

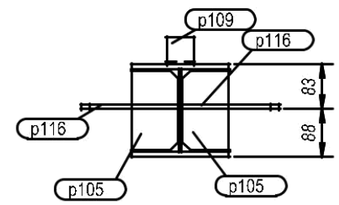

A - A

LISTA DE PARTES DE CONJUNTO

Conjunto: CN4 Número: 1

Acabado: Long. (mm): 6540

Parte	Perfil	Material	Número	Long. (mm)	Peso (kg)
P7	PL10*86	S275JR	2	148	2.0
p48	HEA180	S275JR	1	6522	231.7
p105	PL10*86	S275JR	6	148	5.9
p109	L50*5	S275JR	1	50	0.2
p111	PL120*8	S275JR	1	162	1.2
p116	PL180*8	S275JR	2	140	3.1
p126	PL80*8	S275JR	1	143	0.7
p152	PL180*8	S275JR	1	171	1.9
			Total por conjunto		246.7

Tekla Structures

Firma Soldadores	
Nº Lote hilo de soldar	
Dibujado:	Guillem Extremera
Fecha:	05.11.2018
Escala	1:10

Nº rev.	Revisión	Descripción de revisión	Fecha revisión

MATERIAL: S275JR, SALVO INDICACIÓN — SOLDADURAS

VER PROCEDIMIENTO MARCADO CEE, CORTE, TALADRO Y SOLDADURA — PROYECCIÓN

UNIVERSITAT POLITÈCNICA DE CATALUNYA
BARCELONATECH
Escola Superior d'Enginyeries Industrial, Aeroespacial i Audiovisual de Terrassa

PROYECTO: 18-509
DIBUJO: 18-509/CN4

CE 1035

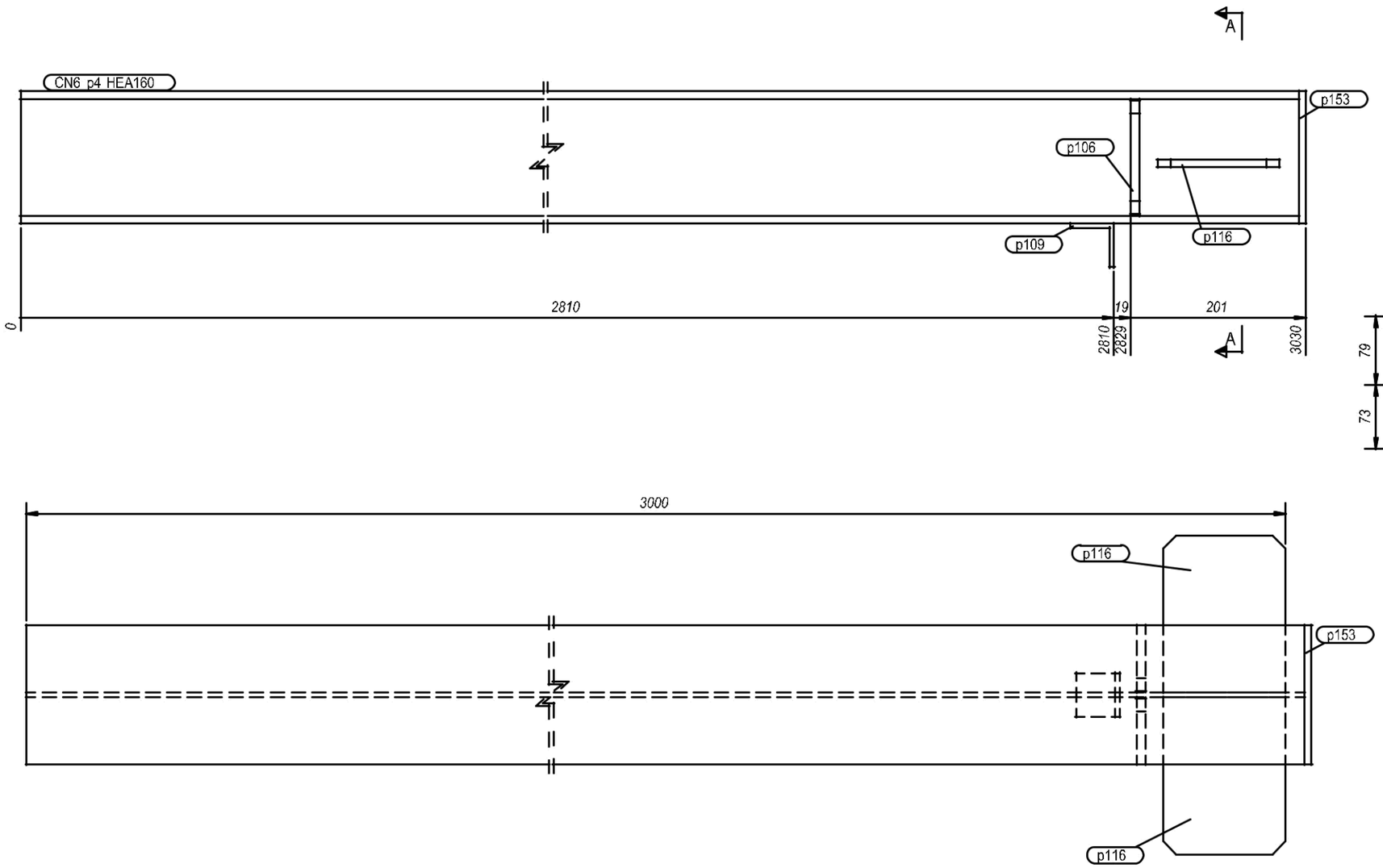

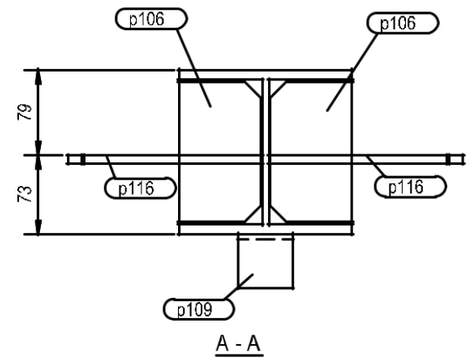

LISTA DE PARTES DE CONJUNTO

Conjunto: CN6 Número: 1

Acabado: Long. (mm): 3030

Parte	Perfil	Material	Número	Long. (mm)	Peso (kg)
p4	HEA160	S275JR	1	3022	92.0
p106	PL10*76	S275JR	2	130	1.5
p109	L50*5	S275JR	1	50	0.2
p116	PL180*8	S275JR	2	140	3.1
p153	PL160*8	S275JR	1	152	1.5
			Total por conjunto		98.3

Tekla Structures

Firma Soldadores	
Nº Lote hilo de soldar	
Dibujado:	Ruben Lex Ferreira
Fecha:	05.11.2018
Escala	1:5

Nº rev.	Revisión	Descripción de revisión	Fecha revisión

MATERIAL: S275JR, SALVO INDICACIÓN — SOLDADURAS

VER "PROCEDIMIENTO MARCADO CEE, CORTE, TALADRO Y SOLDADURA" — PROYECCIÓN

UNIVERSITAT POLITÈCNICA DE CATALUNYA
BARCELONATECH
Escola Superior d'Enginyeries Industrial, Aeroespacial i Audiovisual de Terrassa

PROYECTO: 18-509

DIBUJO: 18-509/CN6

CE 1035

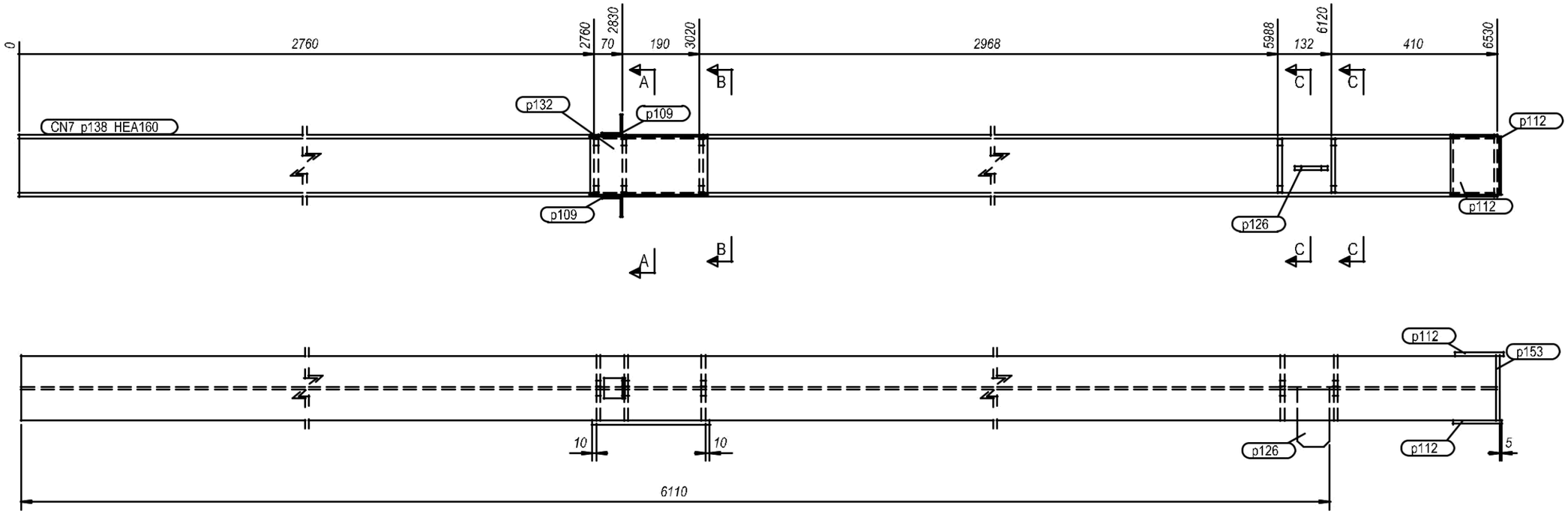

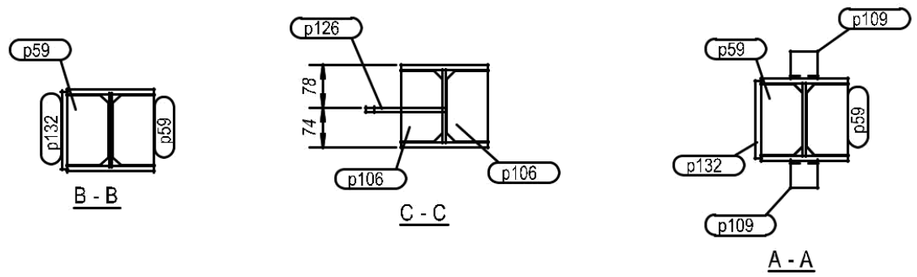

LISTA DE PARTES DE CONJUNTO

Conjunto: CN7 Número: 1

Acabado: Long. (mm): 6540

Parte	Perfil	Material	Número	Long. (mm)	Peso (kg)
p59	PL10*76	S275JR	6	130	4.5
p106	PL10*76	S275JR	4	130	3.0
p109	L50*5	S275JR	2	50	0.4
p112	PL120*8	S275JR	2	143	2.2
p126	PL80*8	S275JR	1	143	0.7
p132	PL290*10	S275JR	1	143	3.3
p138	HEA160	S275JR	1	6522	198.5
p153	PL160*8	S275JR	1	152	1.5
			Total por conjunto		214.1

Tekla Structures

Firma Soldadores	
Nº Lote hilo de soldar	
Dibujado:	Yolbem Exposito Herrera
Fecha:	05.11.2018
Escala	1:5

Nº rev.	Revisión	Descripción de revisión	Fecha revisión

MATERIAL: S275JR, SALVO INDICACIÓN — SOLDADURAS

VER PROCEDIMIENTO MARCADO CEE, CORTE, TALADRO Y SOLDADURA — PROYECCIÓN

UNIVERSITAT POLITÈCNICA DE CATALUNYA
BARCELONATECH
Escola Superior d'Enginyeries Industrial, Aeroespacial i Audiovisual de Terrassa

PROYECTO: 18-509

DIBUJO: 18-509/CN7

1035

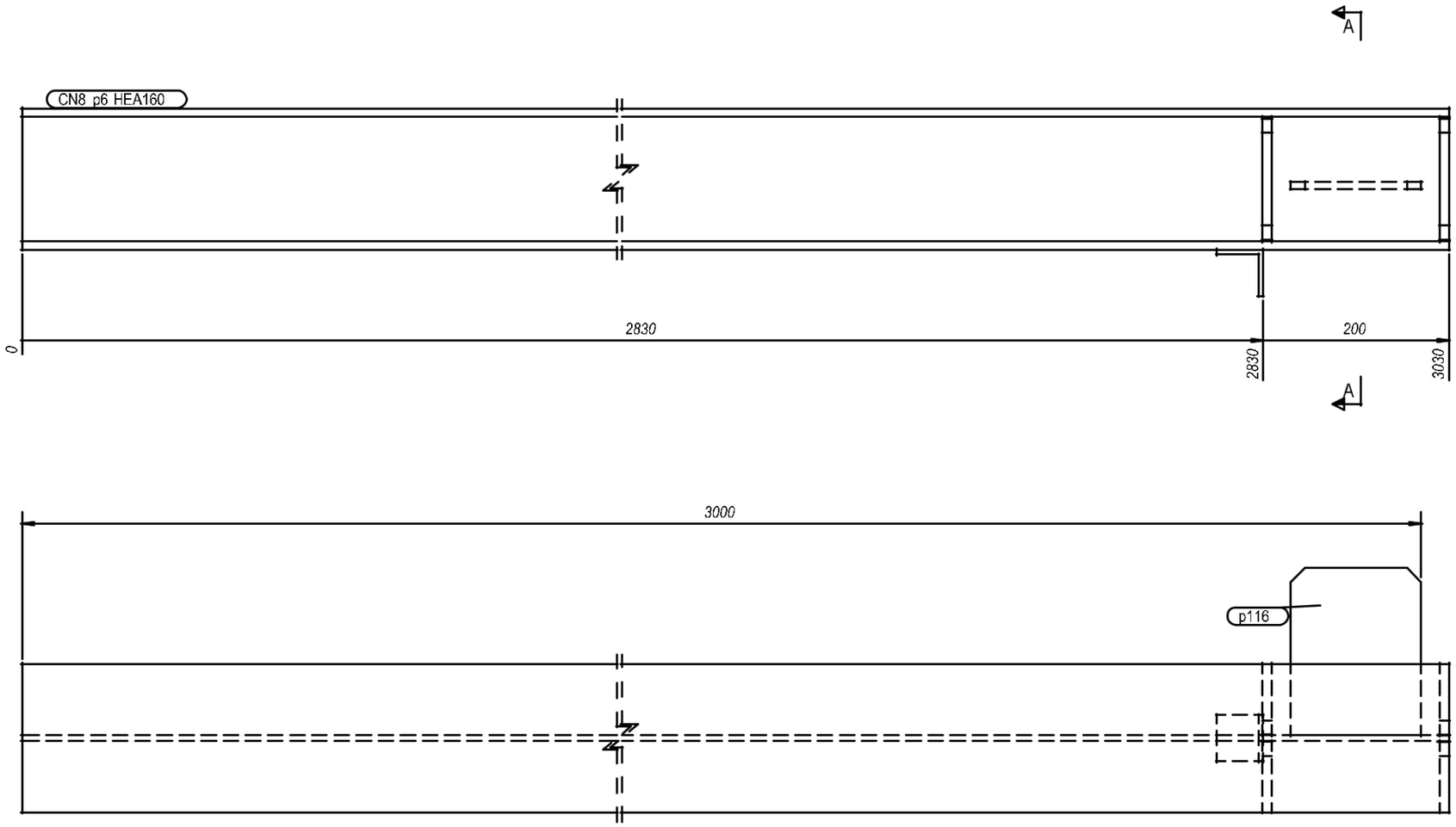

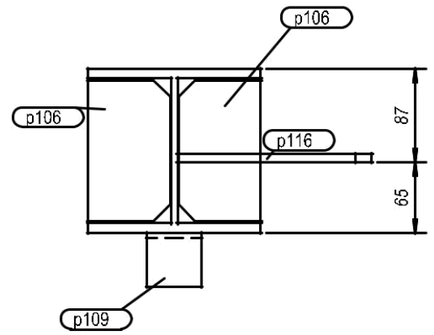

A - A

LISTA DE PARTES DE CONJUNTO

Conjunto: CN8 Número: 1

Acabado: Long. (mm): 3030

Parte	Perfil	Material	Número	Long. (mm)	Peso (kg)
p6	HEA160	S275JR	1	3030	92.2
p106	PL10*76	S275JR	4	130	3.0
p109	L50*5	S275JR	1	50	0.2
p116	PL180*8	S275JR	1	140	1.6
			Total por conjunto		97.0

Tekla Structures

Firma Soldadores	
Nº Lote hilo de soldar	
Dibujado:	Ruben Extremera
Fecha:	05.11.2018
Escala	1:5

Nº rev.	Revisión	Descripción de revisión	Fecha revisión

MATERIAL: S275JR, SALVO INDICACIÓN — SOLDADURAS

VER PROCEDIMIENTO MARCADO CE, CORTE, TALADRO Y SOLDADURA — PROYECCIÓN

UNIVERSITAT POLITÈCNICA DE CATALUNYA
BARCELONATECH
Escola Superior d'Enginyeries Industrial, Aeroespacial i Audiovisual de Terrassa

PROYECTO: 18-509

DIBUJO: 18-509/CN8

CE 1035

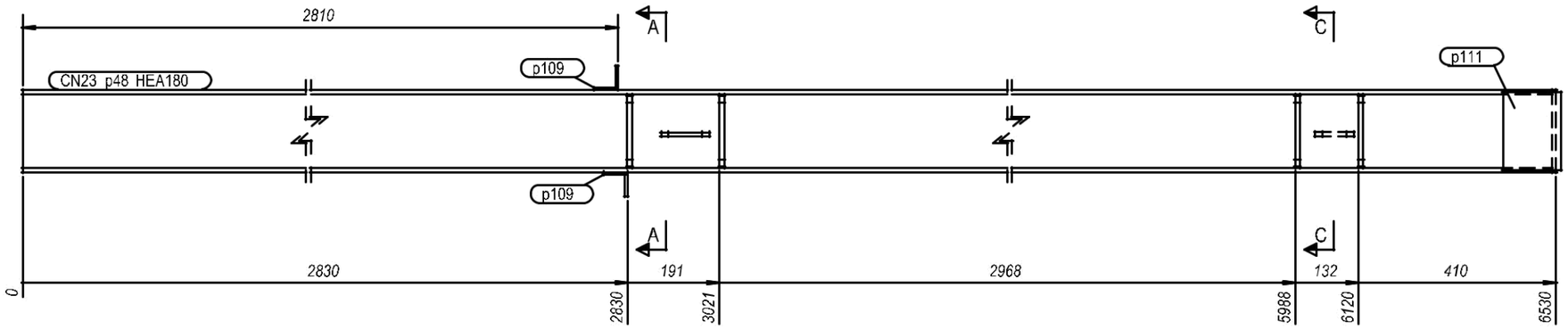

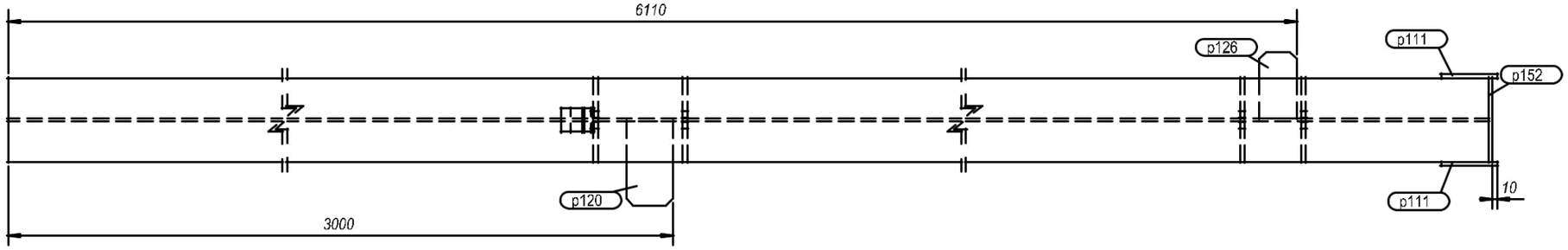

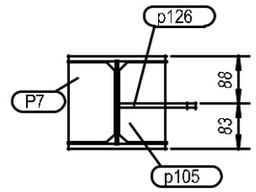

C - C

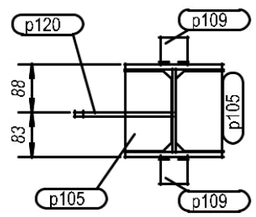

A - A

LISTA DE PARTES DE CONJUNTO

Conjunto: CN23 Número: 1

Acabado: Long. (mm): 6540

Parte	Perfil	Material	Número	Long. (mm)	Peso (kg)
P7	PL10*86	S275JR	2	148	2.0
p48	HEA180	S275JR	1	6522	231.7
p105	PL10*86	S275JR	6	148	5.9
p109	L50*5	S275JR	2	50	0.4
p111	PL120*8	S275JR	2	162	2.4
p120	PL180*8	S275JR	1	100	1.1
p126	PL80*8	S275JR	1	143	0.7
p152	PL180*8	S275JR	1	171	1.9
			Total por conjunto		246.1

Tekla Structures

Firma Sin cadáveres	
Nº Lote hilo de soldar	
Dibujado:	Ruben Extremera
Fecha:	05.11.2018
Escala	1:10

Nº rev.	Revisión	Descripción de revisión	Fecha revisión

MATERIAL: S275JR, SALVO INDICACIÓN — SOLDADURAS

VER PROCEDIMIENTO MARCADO CEE, CORTE, TALADRO Y SOLDADURA — PROYECCIÓN

UNIVERSITAT POLITÈCNICA DE CATALUNYA
BARCELONATECH
Escola Superior d'Enginyeries Industrial, Aeroespacial i Audiovisual de Terrassa

PROYECTO: 18-509

DIBUJO: 18-509/CN23

CE 1035

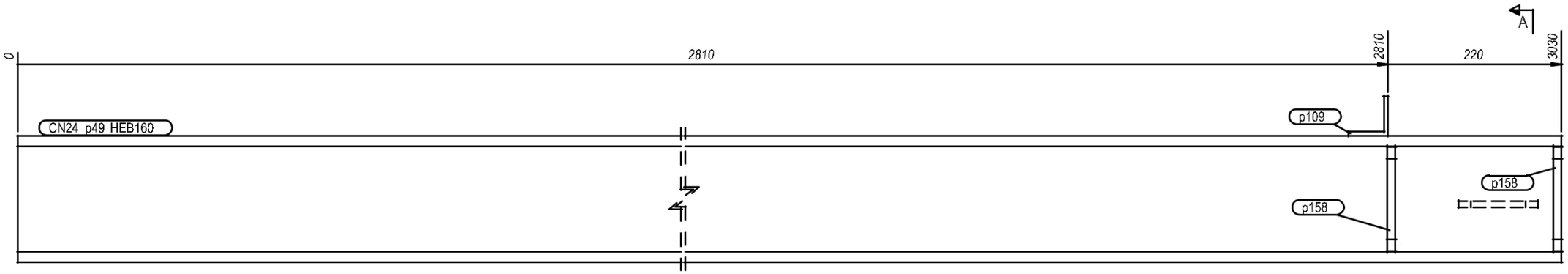

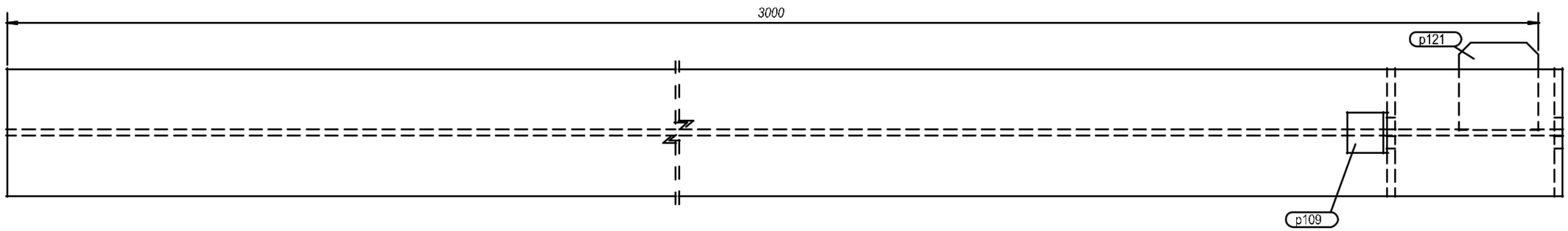

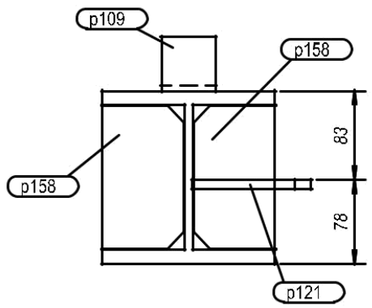

A - A

LISTA DE PARTES DE CONJUNTO

Conjunto: CN24 Número: 1

Acabado: Long. (mm): 3030

Parte	Perfil	Material	Número	Long. (mm)	Peso (kg)
p49	HEB160	S275JR	1	3030	129.0
p109	L50*5	S275JR	1	50	0.2
p121	PL110*8	S275JR	1	100	0.7
p158	PL10*76	S275JR	4	132	3.1
			Total por conjunto		133.0

Tekla Structures

Firma Soldadores	
Nº Lote hilo de soldar	
Dibujado:	Yolben Exposito
Fecha:	05.11.2018
Escala	1:5

Nº rev.	Revisión	Descripción de revisión	Fecha revisión

MATERIAL: S275JR, SALVO INDICACIÓN — SOLDADURAS

VER PROCEDIMIENTO MARCADO CE, CORTE, TALADRO Y SOLDADURA — PROYECCIÓN

UNIVERSITAT POLITÈCNICA DE CATALUNYA
BARCELONATECH
Escola Superior d'Enginyeries Industrial, Aeroespacial i Audiovisual de Terrassa

PROYECTO: 18-509

DIBUJO: 18-509/CN24

CE 1035

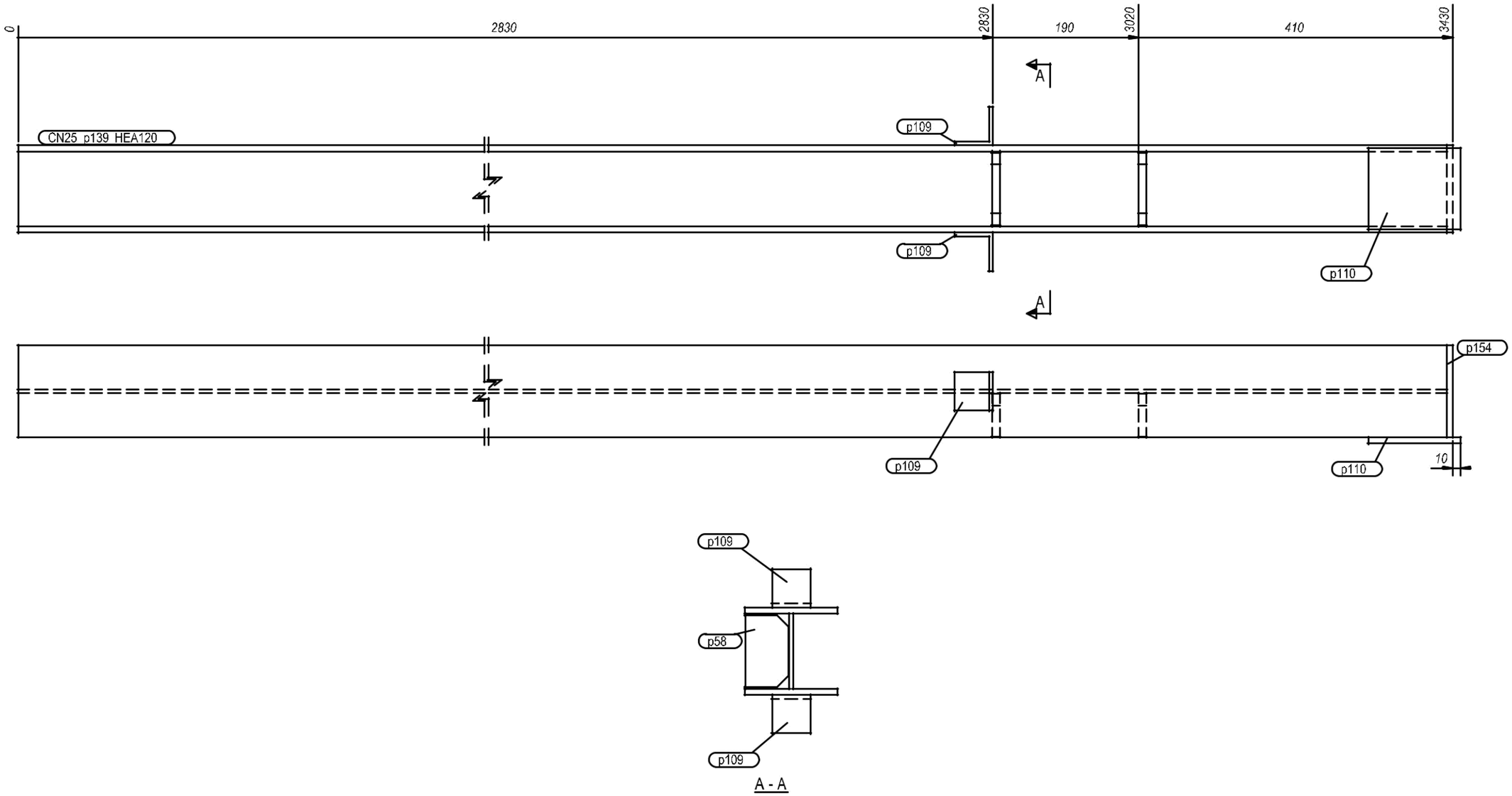

LISTA DE PARTES DE CONJUNTO

Conjunto: CN25 Número: 1

Acabado: Long. (mm): 3440

Parte	Perfil	Material	Número	Long. (mm)	Peso (kg)
p58	PL10*56	S275JR	2	94	0.8
p109	L50*5	S275JR	2	50	0.4
p110	PL120*8	S275JR	1	106	0.8
p139	HEA120	S275JR	1	3422	68.1
p154	PL120*8	S275JR	1	114	0.9
			Total por conjunto		70.9

Tekla Structures

Firma Soldadores	
Nº Lote hilo de soldar	
Dibujado:	Yulem Extremera
Fecha:	05.11.2018
Escala	1:5

Nº rev.	Revisión	Descripción de revisión	Fecha revisión

MATERIAL: S275JR, SALVO INDICACIÓN — SOLDADURAS

VER PROCEDIMIENTO MARCADO CEE, CORTE, TALADRO Y SOLDADURA — PROYECCIÓN

UNIVERSITAT POLITÈCNICA DE CATALUNYA
BARCELONATECH
Escola Superior d'Enginyeries Industrial, Aeroespacial i Audiovisual de Terrassa

PROYECTO: 18-509

DIBUJO: 18-509/CN25

CE 1035

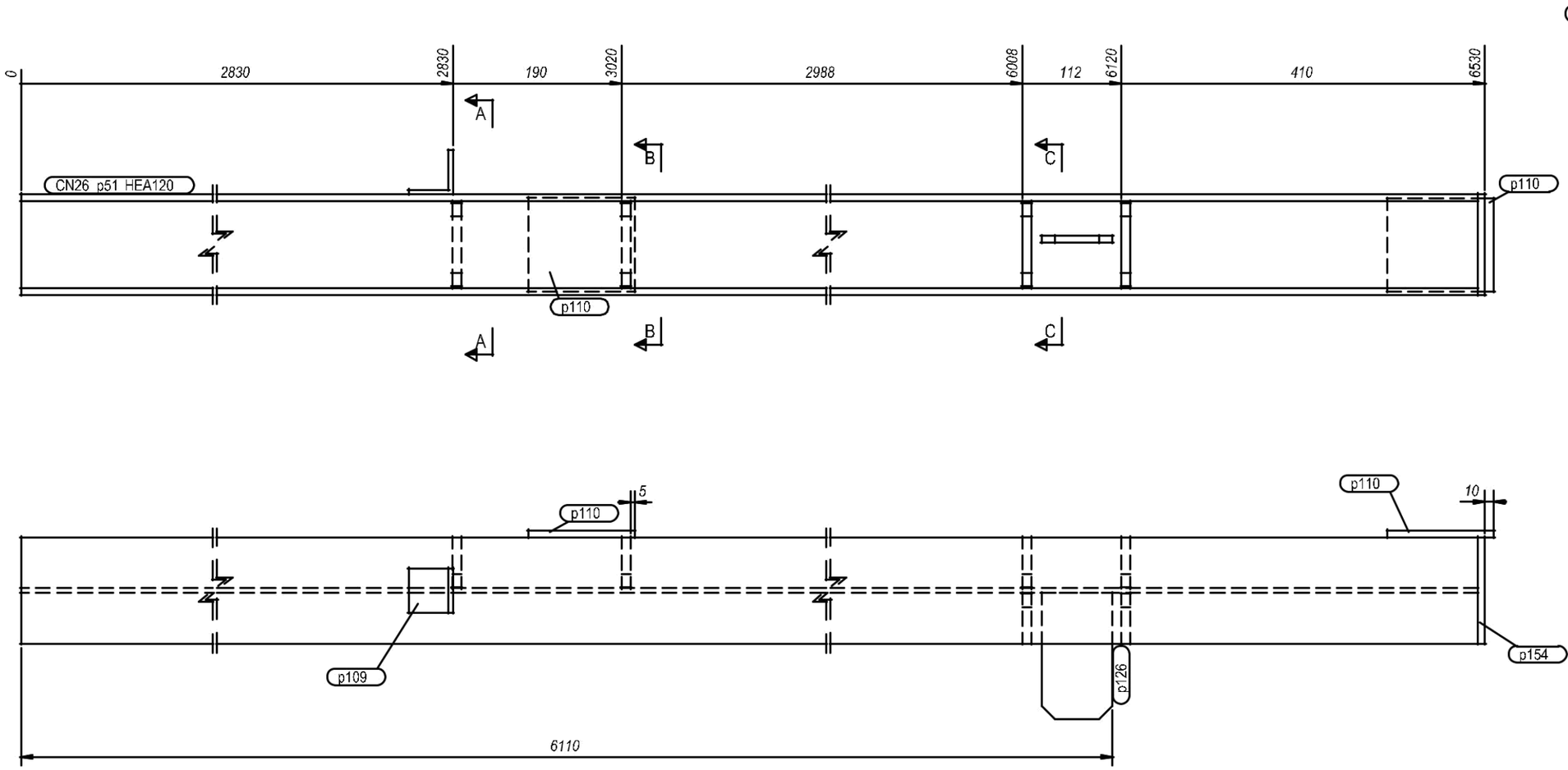

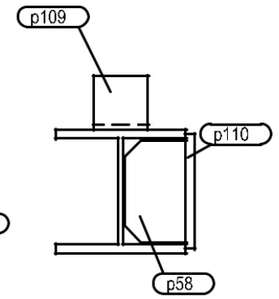

A - A

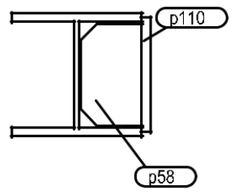

B - B

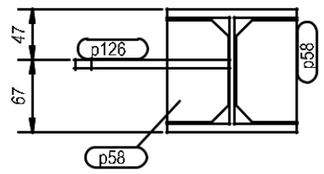

C - C

LISTA DE PARTES DE CONJUNTO

Conjunto: CN26 Número: 1

Acabado: Long. (mm): 6540

Parte	Perfil	Material	Número	Long. (mm)	Peso (kg)
p51	HEA120	S275JR	1	6522	129.7
p58	PL10*56	S275JR	2	94	0.8
p58	PL10*57	S275JR	4	94	1.6
p109	L50*5	S275JR	1	50	0.2
p110	PL120*8	S275JR	1	105	0.8
p110	PL120*8	S275JR	1	106	0.8
p126	PL80*8	S275JR	1	143	0.7
p154	PL120*8	S275JR	1	114	0.9
			Total por conjunto		135.5

Tekla Structures

Firma Soldadores	
Nº Lote hilo de soldar	
Dibujado:	Ruben Extremera
Fecha:	05.11.2018
Escala	1:5

Nº rev.	Revisión	Descripción de revisión	Fecha revisión
MATERIAL: S275JR, SALVO INDICACIÓN			SOLDADURAS
VER PROCEDIMIENTO MARCADO CEE, CORTE, TALADRO Y SOLDADURA			PROYECCIÓN

UNIVERSITAT POLITÈCNICA DE CATALUNYA
BARCELONATECH
Escola Superior d'Enginyeries Industrial, Aeroespacial i Audiovisual de Terrassa

PROYECTO: 18-509
DIBUJO: 18-509/CN26

CE 1035

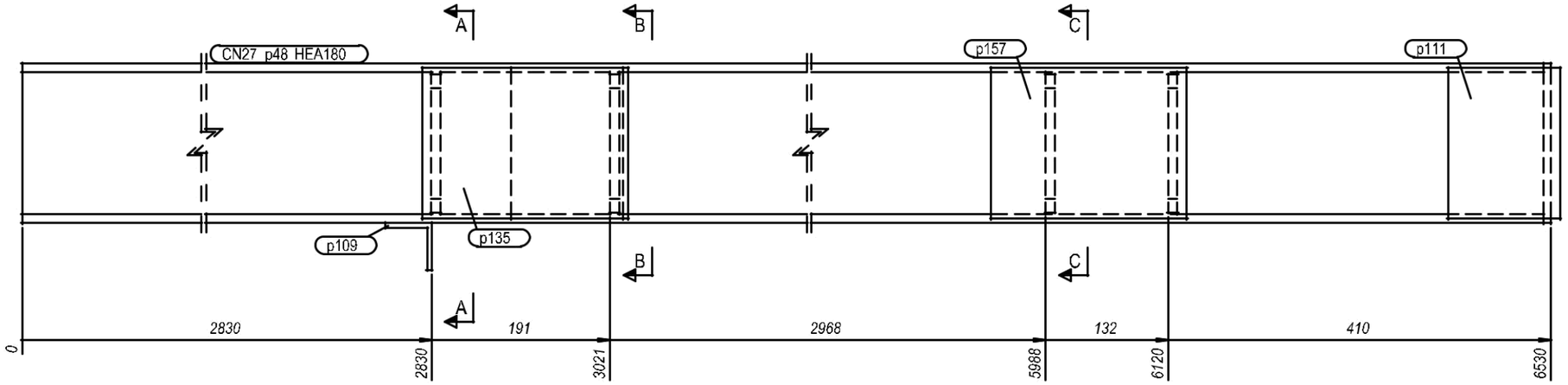

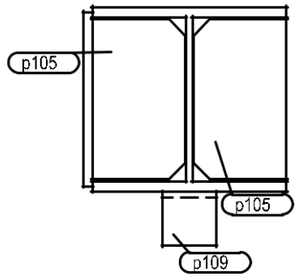

A - A

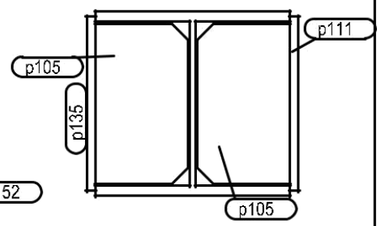

B - B

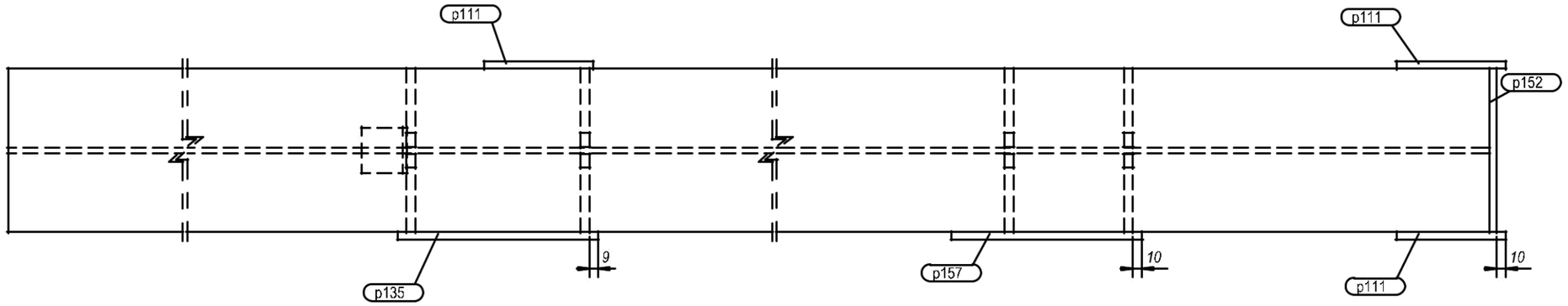

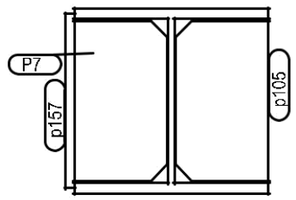

C - C

LISTA DE PARTES DE CONJUNTO

Conjunto: CN27 Número: 1

Acabado: Long. (mm): 6540

Parte	Perfil	Material	Número	Long. (mm)	Peso (kg)
P7	PL10*86	S275JR	2	148	2.0
p48	HEA180	S275JR	1	6522	231.7
p105	PL10*86	S275JR	6	148	5.9
p109	L50*5	S275JR	1	50	0.2
p111	PL120*8	S275JR	3	162	3.7
p135	PL220*8	S275JR	1	162	2.2
p152	PL180*8	S275JR	1	171	1.9
p157	PL210*8	S275JR	1	162	2.1
			Total por conjunto		249.7

Tekla Structures

Firma Soldadores	
Nº Lote hilo de soldar	
Dibujado:	Yolbem Exposito Herrera
Fecha:	05.11.2018
Escala	1:5

Nº rev.	Revisión	Descripción de revisión	Fecha revisión

MATERIAL: S275JR, SALVO INDICACIÓN — SOLDADURAS

VER PROCEDIMIENTO MARCADO CEE, CORTE, TALADRO Y SOLDADURA — PROYECCIÓN

UNIVERSITAT POLITÈCNICA DE CATALUNYA
BARCELONATECH
Escola Superior d'Enginyeries Industrial, Aeroespacial i Audiovisual de Terrassa

PROYECTO: 18-509

DIBUJO: 18-509/CN27

CE 1035

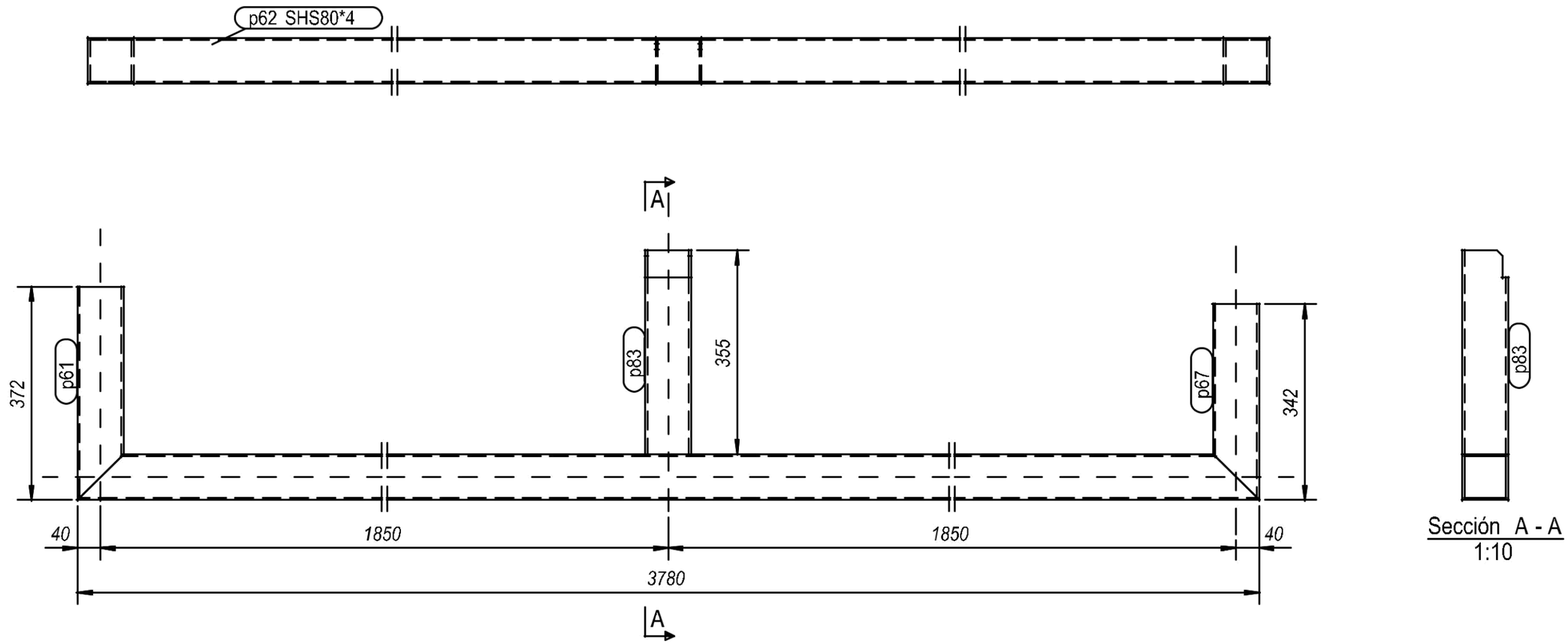

LISTA DE PARTES DE CONJUNTO

Conjunto: CN36 Número: 1

Acabado: Long. (mm): 3780

Parte	Perfil	Material	Número	Long. (mm)	Peso (kg)
p61	SHS80*4	S275JR	1	372	3.2
p62	SHS80*4	S275JR	1	3780	35.3
p67	SHS80*4	S275JR	1	342	2.9
p83	SHS80*4	S275JR	1	355	3.3
			Total por conjunto		44.6

Tekla Structures

Firma Soldadores	
Nº Lote hilo de soldar	
Dibujado:	Ruben Extremera
Fecha:	05.11.2018
Escala:	1:10

Nº rev.	Revisión	Descripción de revisión	Fecha revisión

MATERIAL: S275JR, SALVO INDICACIÓN — SOLDADURAS

VER PROCEDIMIENTO MARCADO CEE, CORTE, TALADRO Y SOLDADURA — PROYECCIÓN

UNIVERSITAT POLITÈCNICA DE CATALUNYA
BARCELONATECH
Escola Superior d'Enginyeries Industrial, Aeroespacial i Audiovisual de Terrassa

PROYECTO: 18-509

DIBUJO: 18-509/CN36

CE 1035

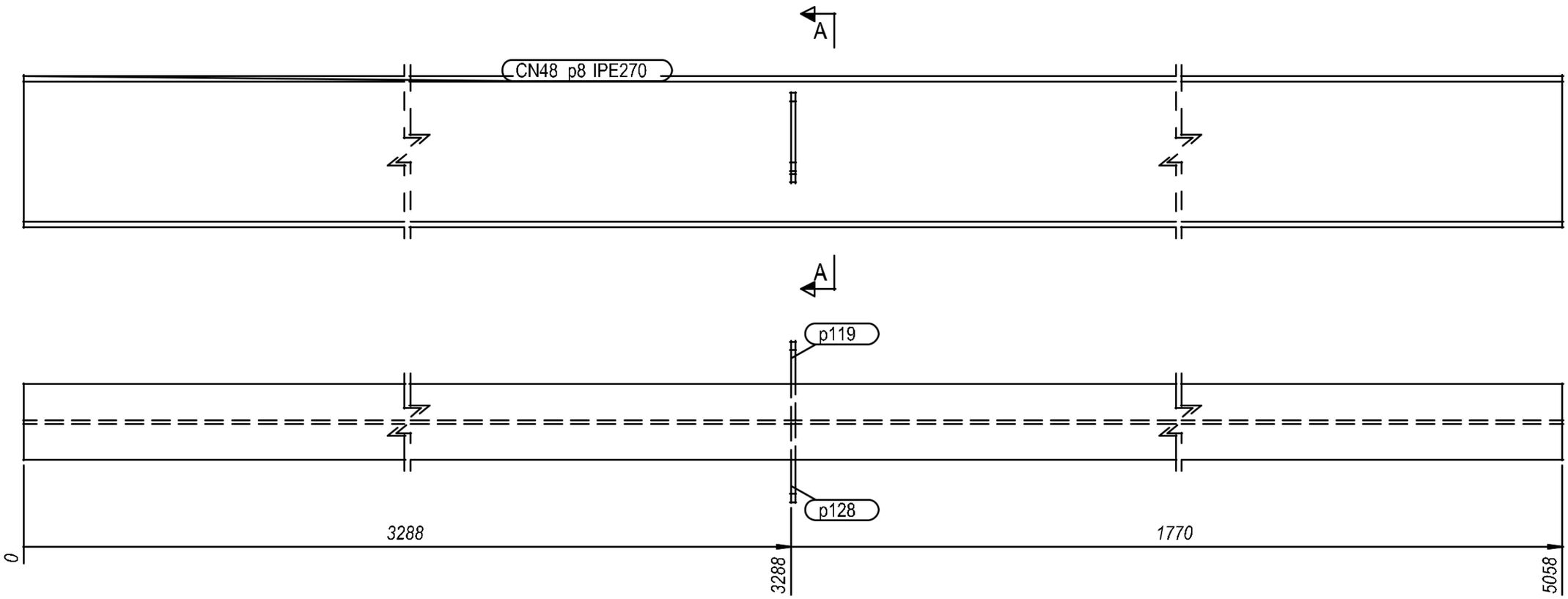

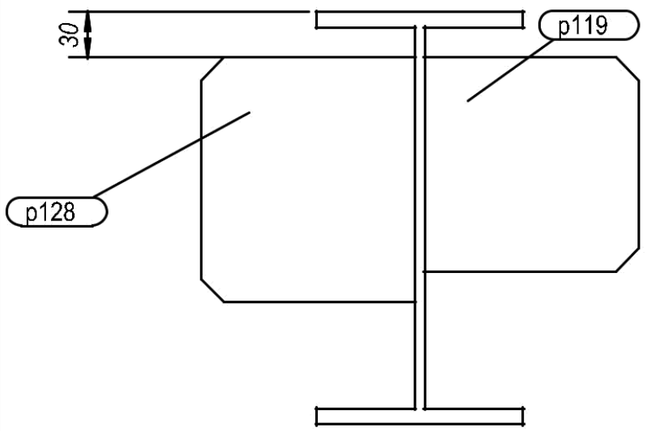

A - A

Nº rev.	Revisión	Descripción de revisión	Fecha revisión

LISTA DE PARTES DE CONJUNTO

Conjunto: CN48 Número: 1

Acabado: Long. (mm): 5058

Parte	Perfil	Material	Número	Long. (mm)	Peso (kg)
p8	IPE270	S275JR	1	5058	182.2
p119	PL140*8	S275JR	1	140	1.2
p128	PL140*8	S275JR	1	160	1.4
			Total por conjunto		184.9

MATERIAL: S275JR, SALVO INDICACIÓN

VER PROCEDIMIENTO MARCADO CEE, CORTE, TALADRO Y SOLDADURA

SOLDADURAS

PROYECCIÓN

Firma Soldadores	
Nº Lote hilo de soldar	
Dibujado:	Ruben Extremera
Fecha:	05.11.2018
Escala:	1:5

UNIVERSITAT POLITÈCNICA DE CATALUNYA
BARCELONATECH
Escola Superior d'Enginyeries Industrial, Aeroespacial i Audiovisual de Terrassa

PROYECTO: 18-509

DIBUJO: 18-509/CN48

CE 1035

Tekla Structures

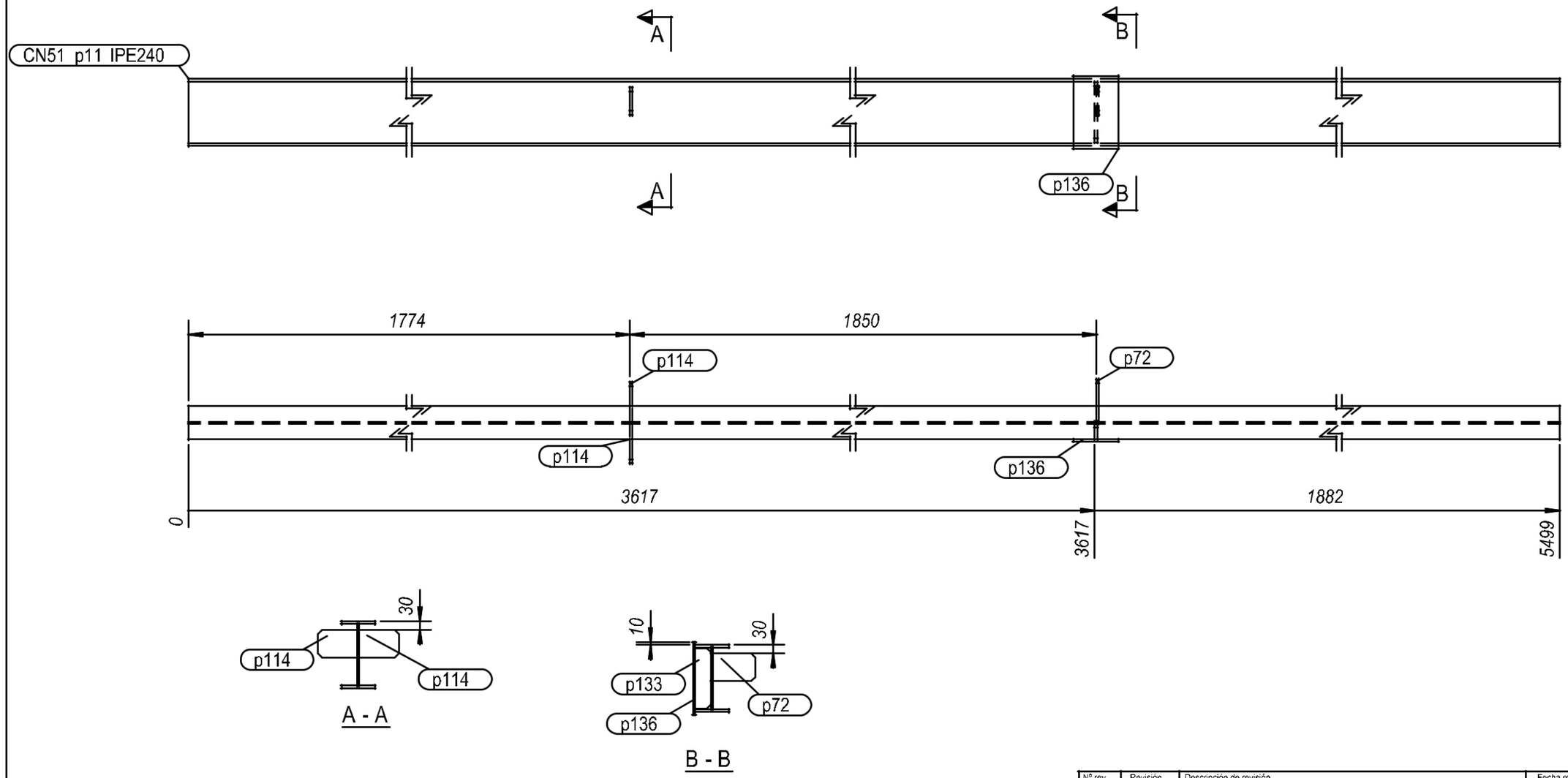

Nº rev.	Revisión	Descripción de revisión	Fecha revisión

LISTA DE PARTES DE CONJUNTO

Conjunto: CN51 Número: 1

Acabado: Long. (mm): 5499

Parte	Perfil	Material	Número	Long. (mm)	Peso (kg)
p11	IPE240	S275JR	1	5499	168.8
p72	PL100*8	S275JR	1	153	0.9
p114	PL100*8	S275JR	2	143	1.8
p133	PL10*57	S275JR	1	216	0.9
p136	PL260*8	S275JR	1	162	2.6
				Total por conjunto	175.0

Firma Soldadores	
Nº Lote hilo de soldar	
Dibujado:	Ruben Extremera
Fecha:	05.11.2018
Escala:	1:20

MATERIAL: S275JR, SALVO INDICACIÓN

VER PROCEDIMIENTO MARCADO CEE, CORTE, TALADRO Y SOLDADURA

SOLDADURAS

PROYECCIÓN

UNIVERSITAT POLITÈCNICA DE CATALUNYA
BARCELONATECH
Escola Superior d'Enginyeries Industrial, Aeroespacial i Audiovisual de Terrassa

PROYECTO: 18-509

DIBUJO: 18-509/CN51

1035

Tekla Structures

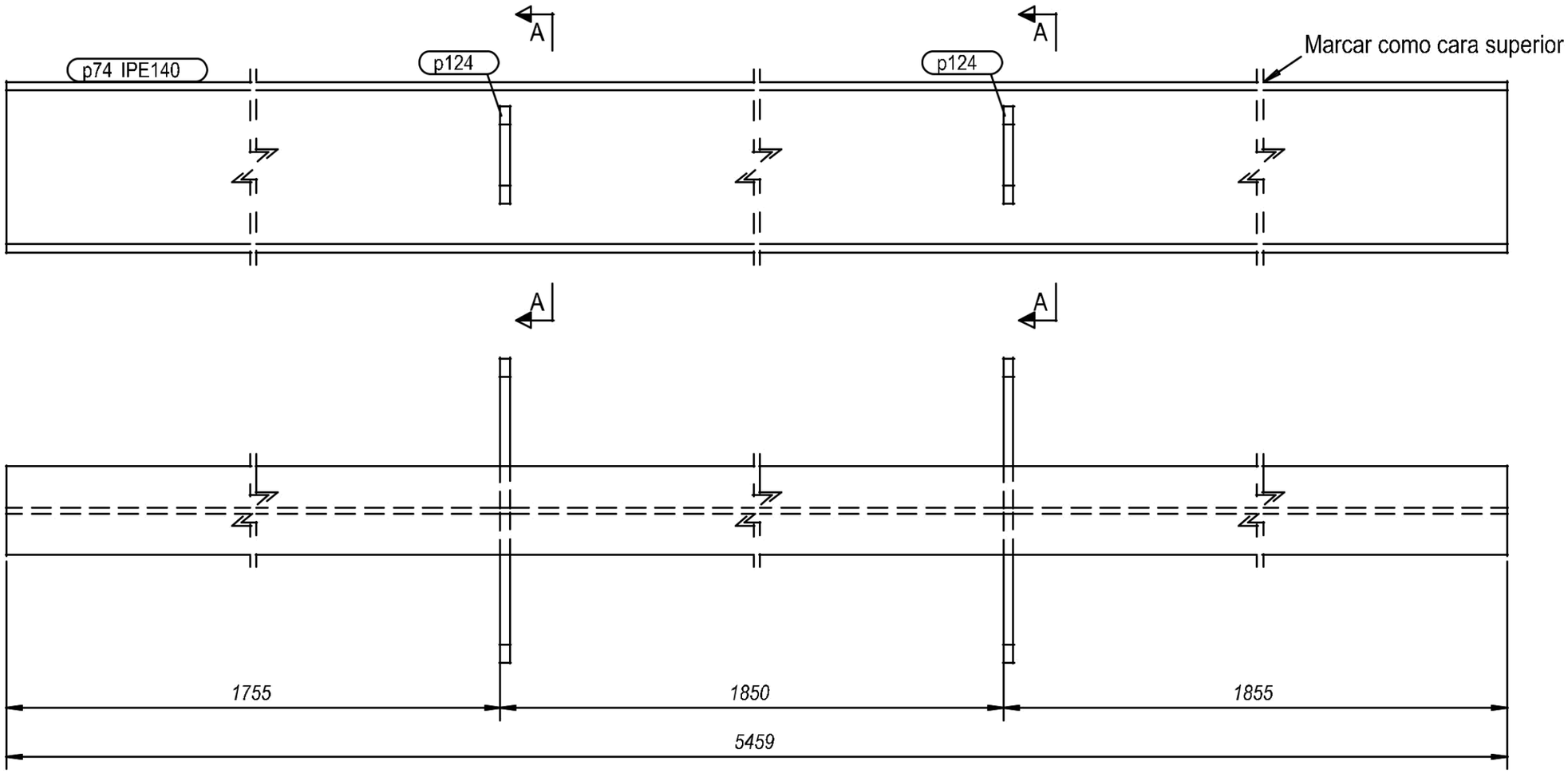

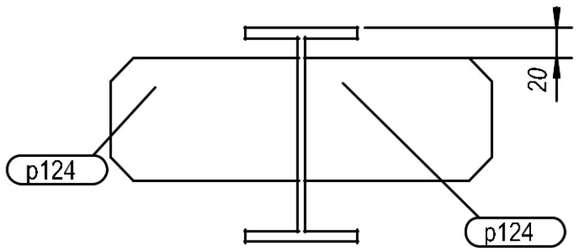

A - A

Nº rev.	Revisión	Descripción de revisión	Fecha revisión

LISTA DE PARTES DE CONJUNTO

Conjunto: CN69 Número: 1

Acabado: Long. (mm): 5459

Parte	Perfil	Material	Número	Long. (mm)	Peso (kg)
p74	IPE140	S275JR	1	5459	70.3
p124	PL80*8	S275JR	4	123	2.4
				Total por conjunto	72.7

MATERIAL: S275JR, SALVO INDICACIÓN

VER PROCEDIMIENTO MARCADO CEE, CORTE, TALADRO Y SOLDADURA

SOLDADURAS

PROYECCIÓN

Firma Soldadores	
Nº Lote hilo de soldar	
Dibujado:	Ruben Extremera
Fecha:	05.11.2018
Escala:	1:5

UNIVERSITAT POLITÈCNICA DE CATALUNYA
BARCELONATECH
Escola Superior d'Enginyeries Industrial, Aeroespacial i Audiovisual de Terrassa

PROYECTO: 18-509

DIBUJO: 18-509/CN69

CE 1035

Tekla Structures

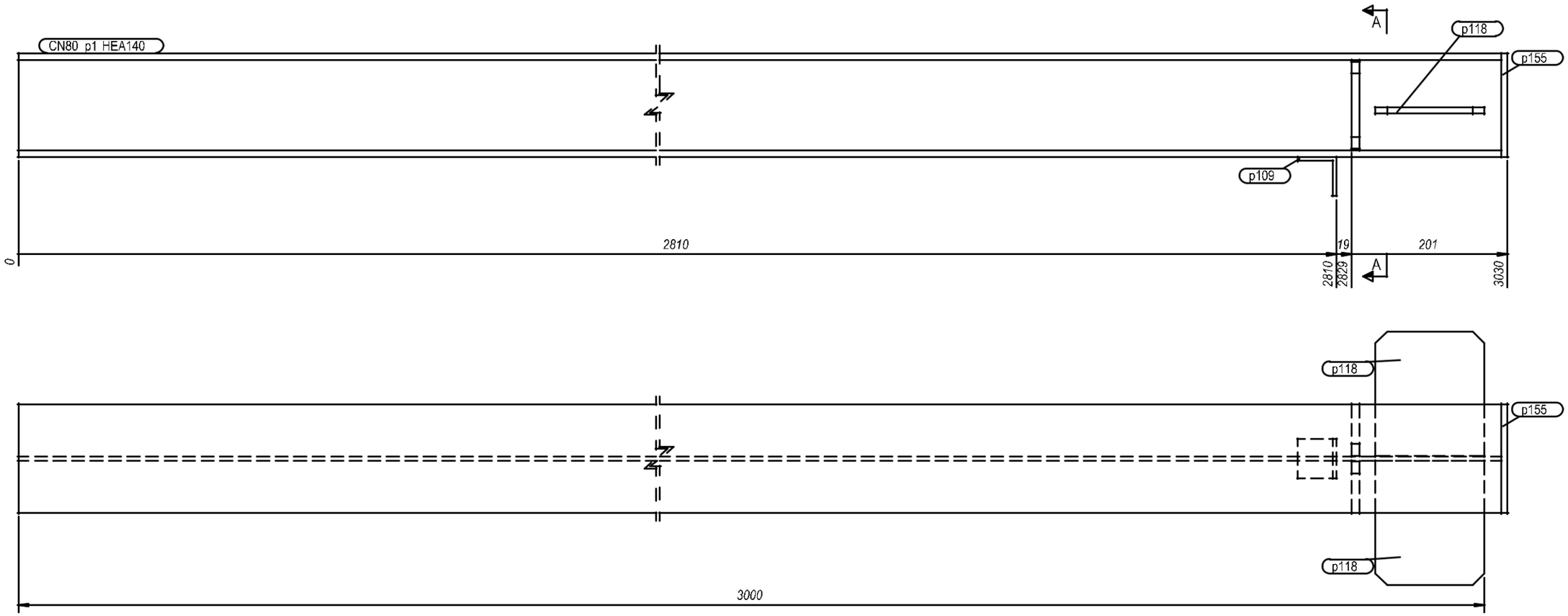

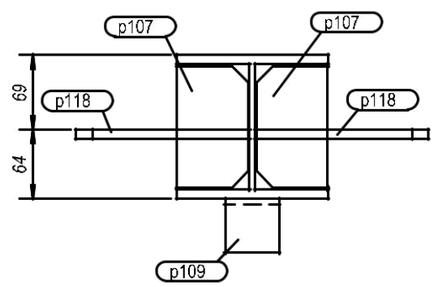

A - A

LISTA DE PARTES DE CONJUNTO

Conjunto: CN80 Número: 1

Acabado: Long. (mm): 3030

Parte	Perfil	Material	Número	Long. (mm)	Peso (kg)
p1	HEA140	S275JR	1	3022	74.5
p107	PL10*66	S275JR	2	112	1.1
p109	L50*5	S275JR	1	50	0.2
p118	PL160*8	S275JR	2	140	2.8
p155	PL140*8	S275JR	1	133	1.2
			Total por conjunto		79.8

Tekla Structures

Firma Soldadores	
Nº Lote hilo de soldar	
Dibujado:	Ruben Extremera
Fecha:	05.11.2018
Escala	1:5

Nº rev.	Revisión	Descripción de revisión	Fecha revisión

MATERIAL: S275JR, SALVO INDICACIÓN — SOLDADURAS

VER PROCEDIMIENTO MARCADO CEE, CORTE, TALADRO Y SOLDADURA — PROYECCIÓN

UNIVERSITAT POLITÈCNICA DE CATALUNYA
BARCELONATECH
Escola Superior d'Enginyeries Industrial, Aeroespacial i Audiovisual de Terrassa

PROYECTO: 18-509

DIBUJO: 18-509/CN80

CE 1035

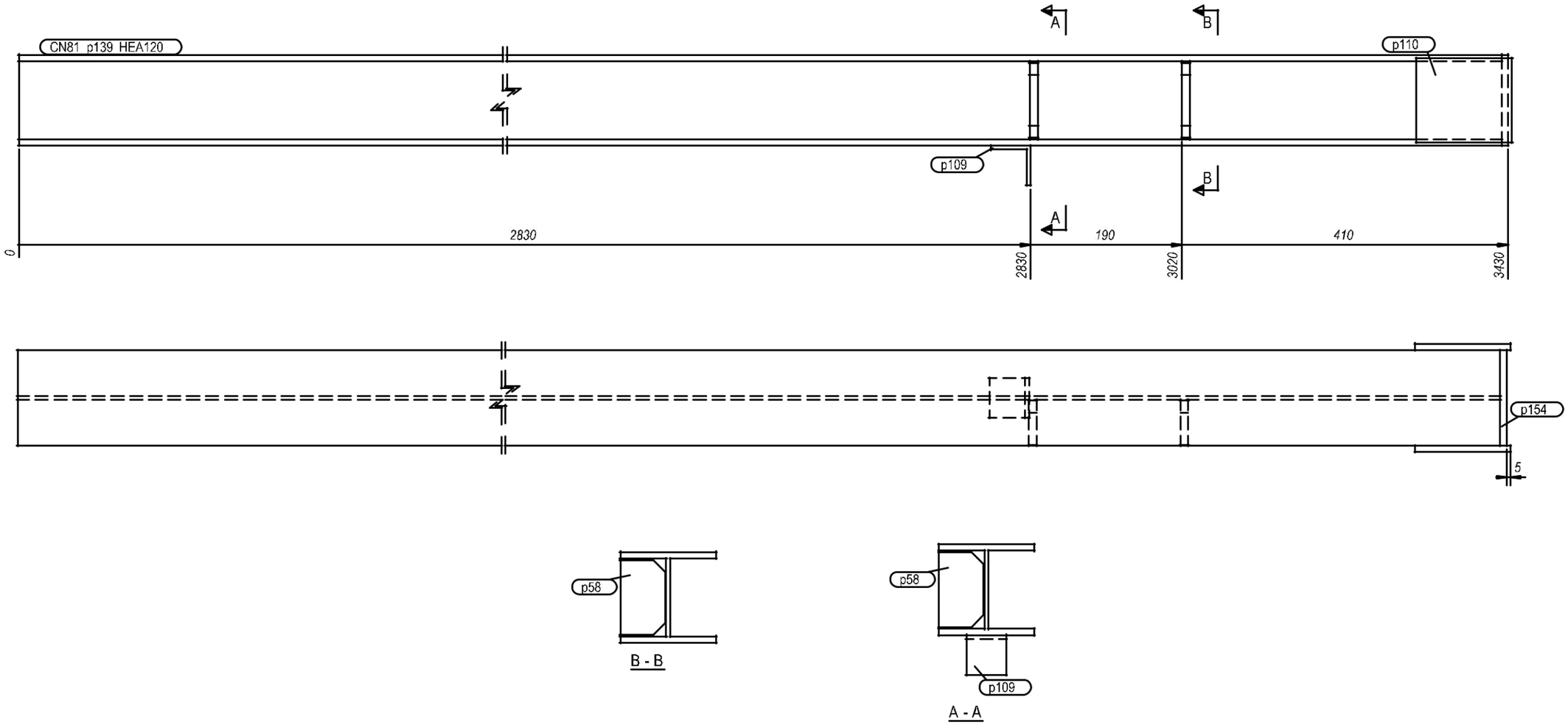

LISTA DE PARTES DE CONJUNTO

Conjunto: CN81 Número: 1

Acabado: Long. (mm): 3435

Parte	Perfil	Material	Número	Long. (mm)	Peso (kg)
p58	PL10*56	S275JR	2	94	0.8
p109	L50*5	S275JR	1	50	0.2
p110	PL120*8	S275JR	2	106	1.6
p139	HEA120	S275JR	1	3422	68.1
p154	PL120*8	S275JR	1	114	0.9
			Total por conjunto		71.5

Tekla Structures

Firma Sin cadenas	
Nº Lote hilo de soldar	
Dibujado:	Videm Ex.remera
Fecha:	05.11.2018
Escala	1:5

Nº rev.	Revisión	Descripción de revisión	Fecha revisión

MATERIAL: S275JR, SALVO INDICACIÓN — SOLDADURAS

VER "PROCEDIMIENTO MARCADO CEE, CORTE, TALADRO Y SOLDADURA" — PROYECCIÓN

UNIVERSITAT POLITÈCNICA DE CATALUNYA
BARCELONATECH
Escola Superior d'Enginyeries Industrial, Aeroespacial i Audiovisual de Terrassa

PROYECTO: 18-509

DIBUJO: 18-509/CN81

1035

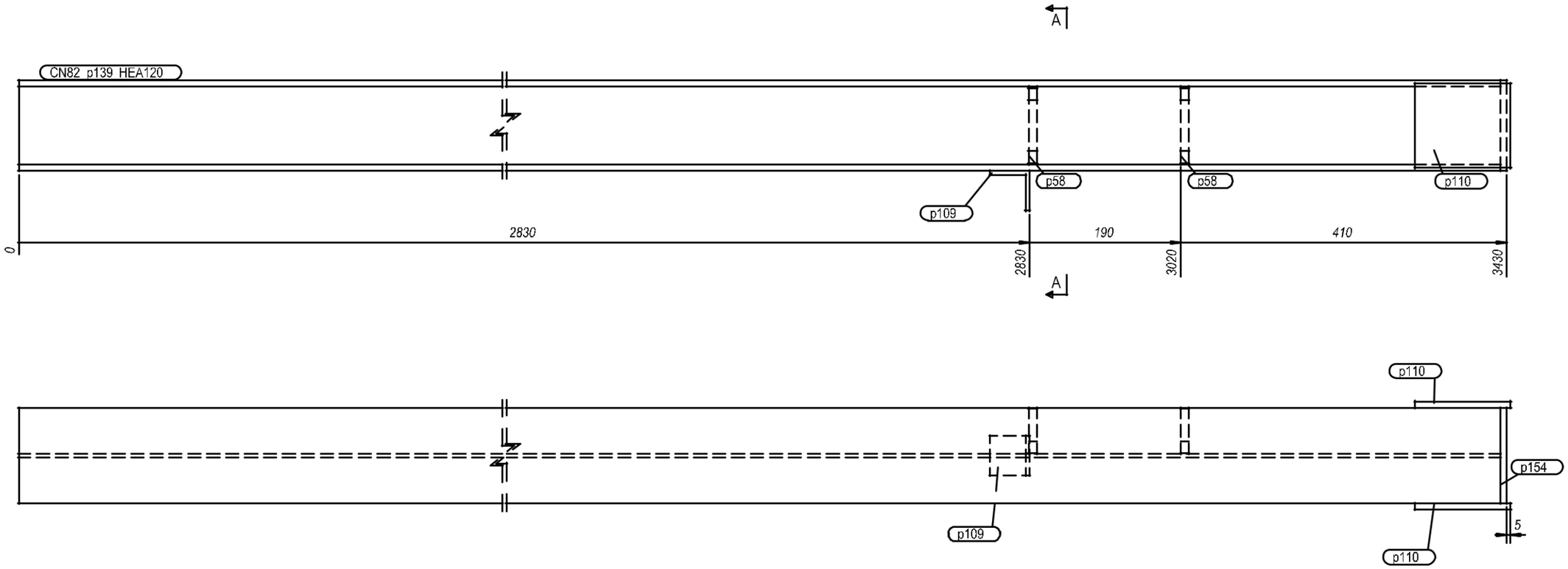

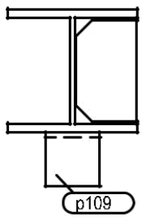

Sección A - A
1:5

LISTA DE PARTES DE CONJUNTO

Conjunto: CN82 Número: 1
Acabado: Long. (mm): 3435

Parte	Perfil	Material	Número	Long. (mm)	Peso (kg)
p58	PL10*57	S275JR	2	94	0.8
p109	L50*5	S275JR	1	50	0.2
p110	PL120*8	S275JR	2	106	1.6
p139	HEA120	S275JR	1	3422	68.1
p154	PL120*8	S275JR	1	114	0.9
			Total por conjunto		71.5

Tekla Structures

Firma Soldadores	
Nº Lote hilo de soldar	
Dibujado:	Yolbem Exumenera
Fecha:	05.11.2018
Escala	1:5

Nº rev.	Revisión	Descripción de revisión	Fecha revisión

MATERIAL: S275JR, SALVO INDICACIÓN — SOLDADURAS
VER PROCEDIMIENTO MARCADO CEE, CORTE, TALADRO Y SOLDADURA — PROYECCIÓN

UNIVERSITAT POLITÈCNICA DE CATALUNYA
BARCELONATECH
Escola Superior d'Enginyeries Industrial, Aeroespacial i Audiovisual de Terrassa

PROYECTO: 18-509
DIBUJO: 18-509/CN82

1035

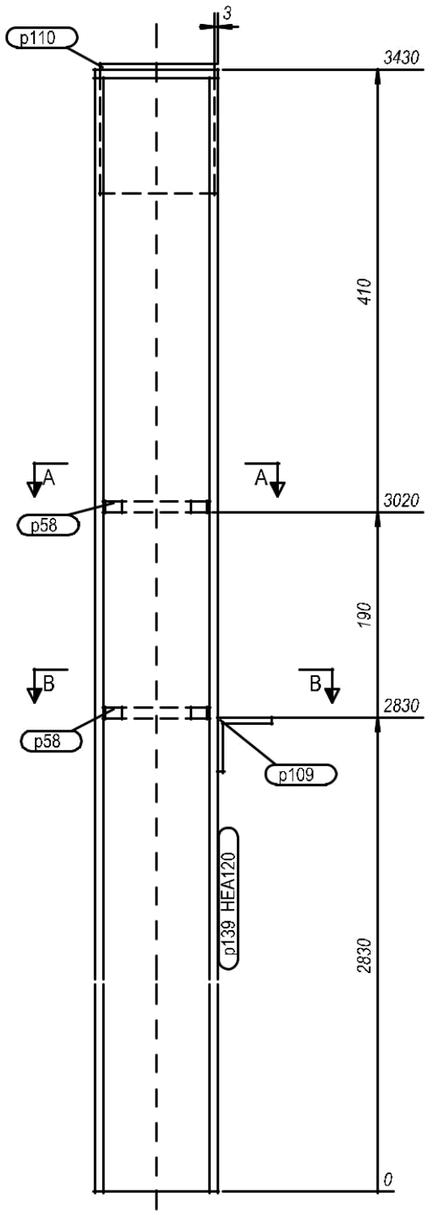

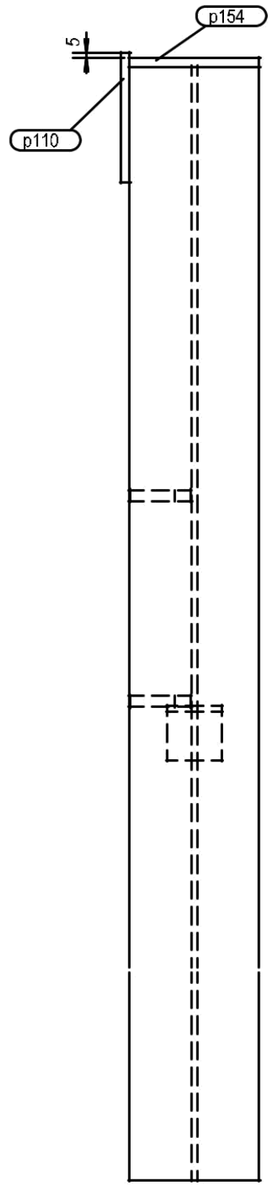

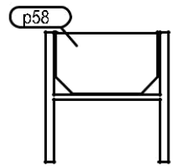

A - A

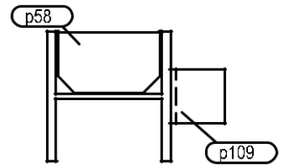

B - B

LISTA DE PARTES DE CONJUNTO

Conjunto: CN83 Número: 1

Acabado: Long. (mm): 3435

Parte	Perfil	Material	Número	Long. (mm)	Peso (kg)
p58	PL10*56	S275JR	2	94	0.8
p109	L50*5	S275JR	1	50	0.2
p110	PL120*8	S275JR	1	106	0.8
p139	HEA120	S275JR	1	3422	68.1
p154	PL120*8	S275JR	1	114	0.9
			Total por conjunto		70.7

Tekla Structures

Firma Soldadores	
Nº Lote hilo de soldar	
Dibujado:	Adrian Lex Ferreira
Fecha:	05.11.2018
Escala	1:5

Nº rev.	Revisión	Descripción de revisión	Fecha revisión

MATERIAL: S275JR, SALVO INDICACIÓN — SOLDADURAS

VER PROCEDIMIENTO MARCADO CEE, CORTE, TALADRO Y SOLDADURA — PROYECCIÓN

UNIVERSITAT POLITÈCNICA DE CATALUNYA
BARCELONATECH
Escola Superior d'Enginyeries Industrial, Aeroespacial i Audiovisual de Terrassa

PROYECTO: 18-509
DIBUJO: 18-509/CN83

CE 1035

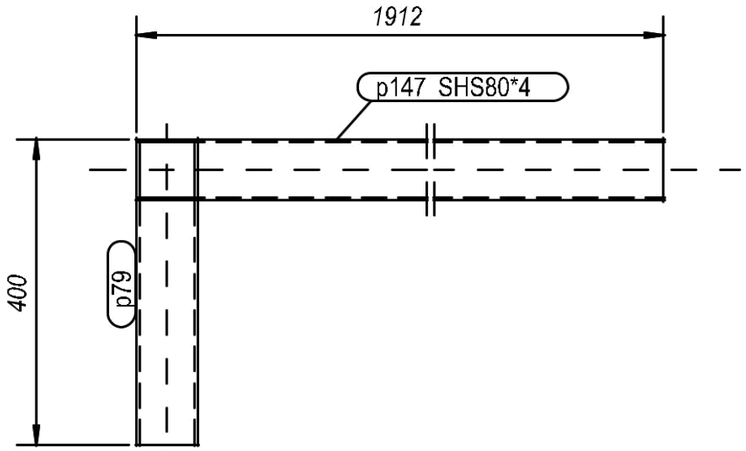

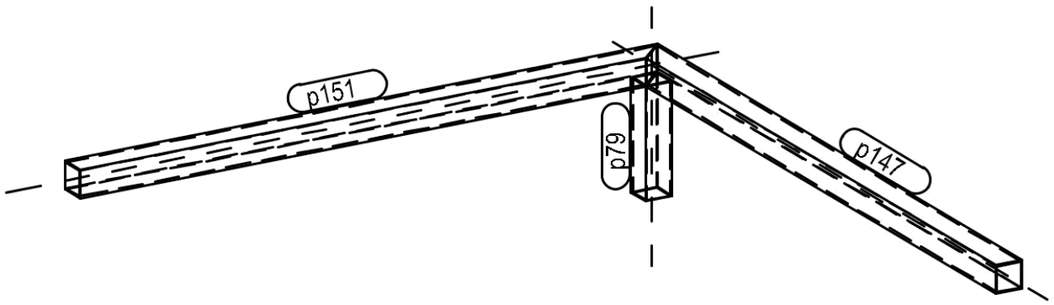

1:20

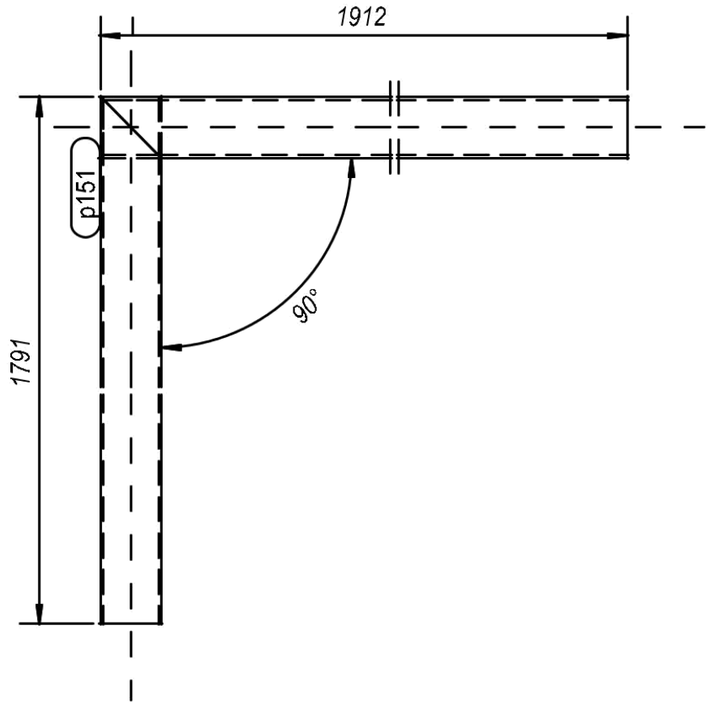

Nº rev.	Revisión	Descripción de revisión	Fecha revisión

LISTA DE PARTES DE CONJUNTO

Conjunto: CN113 Número: 1

Acabado: Long. (mm): 1912

Parte	Perfil	Material	Número	Long. (mm)	Peso (kg)
p79	SHS80*4	S275JR	1	320	3.1
p147	SHS80*4	S275JR	1	1912	17.9
p151	SHS80*4	S275JR	1	1791	16.7
			Total por conjunto		37.6

MATERIAL: S275JR, SALVO INDICACIÓN

VER PROCEDIMIENTO MARCADO CEE, CORTE, TALADRO Y SOLDADURA

SOLDADURAS

PROYECCIÓN

Firma Soldadores	
Nº Lote hilo de soldar	
Dibujado:	Ruben Extremera
Fecha:	05.11.2018
Escala:	1:10

UNIVERSITAT POLITÈCNICA DE CATALUNYA
BARCELONATECH
Escola Superior d'Enginyeries Industrial, Aeroespacial i Audiovisual de Terrassa

PROYECTO: 18-509

DIBUJO: 18-509/CN113

CE 1035

Tekla Structures

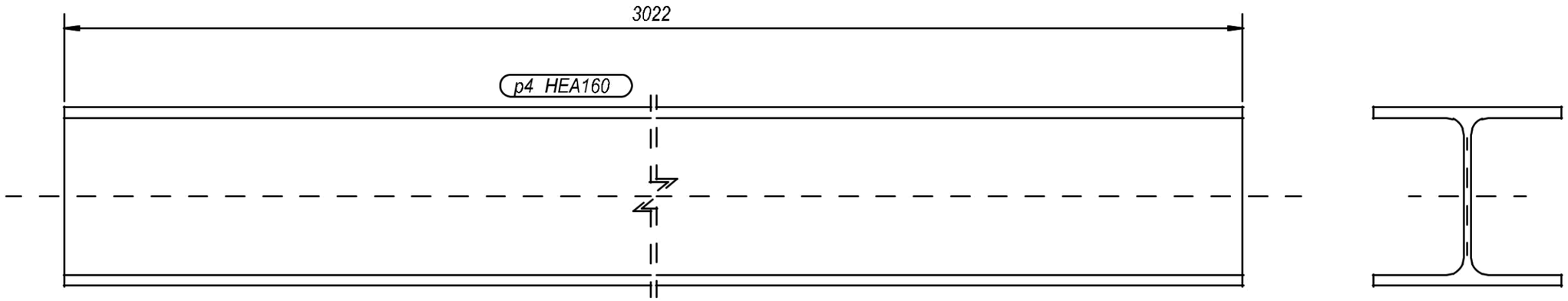

Tekla Structures

Parte	Perfil	Longitud	Número	Conjunto
p4	HEA160	3022	1	CN6
		Número total:	1	

Firma Soldadores	
Nº Lote hilo de soldar	
Dibujado:	Ruben Extremera
Fecha:	05.11.2018
Escala:	1:5

Nº rev.	Revisión	Descripción de revisión	Fecha revisión

MATERIAL: S275JR, SALVO INDICACIÓN — SOLDADURAS

VER PROCEDIMIENTO MARCADO CEE, CORTE, TALADRO Y SOLDADURA — PROYECCIÓN

UNIVERSITAT POLITÈCNICA DE CATALUNYA
BARCELONATECH
Escola Superior d'Enginyeries Industrial, Aeroespacial i Audiovisual de Terrassa

PROYECTO: 18-509
DIBUJO: 18-509/P4

CE 1035

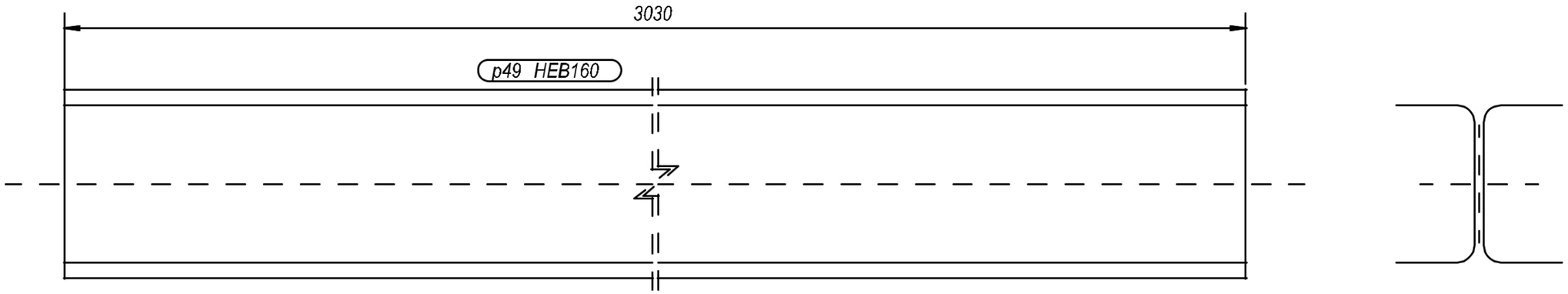

Tekla Structures

Parte	Perfil	Longitud	Número	Conjunto
p49	HEB160	3030	1	CN24
		Número total:	1	

Firma Soldadores	
Nº Lote hilo de soldar	
Dibujado:	Ruben Extremera
Fecha:	05.11.2018
Escala:	1:5

Nº rev.	Revisión	Descripción de revisión	Fecha revisión

MATERIAL: S275JR, SALVO INDICACIÓN — SOLDADURAS

VER PROCEDIMIENTO MARCADO CEE, CORTE, TALADRO Y SOLDADURA — PROYECCIÓN

UNIVERSITAT POLITÈCNICA DE CATALUNYA
BARCELONATECH
Escola Superior d'Enginyeries Industrial, Aeroespacial i Audiovisual de Terrassa

PROYECTO: 18-509
DIBUJO: 18-509/P49

CE 1035

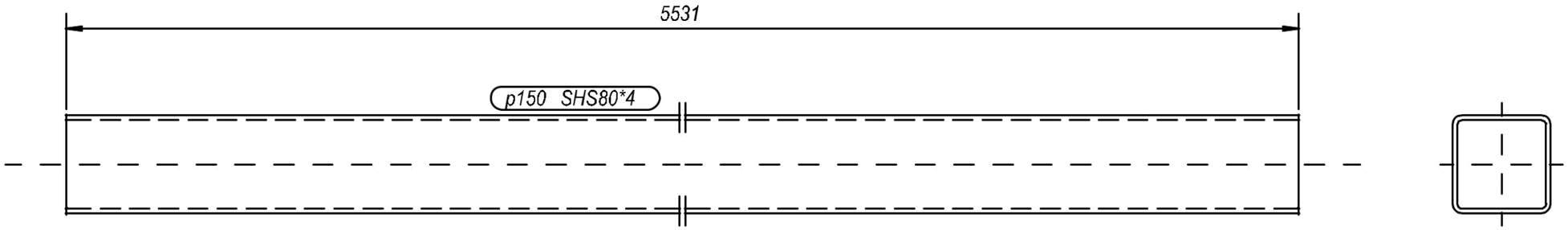

Tekla Structures

Parte	Perfil	Longitud	Número	Conjunto
p150	SHS80*4	5531	1	CN115
		Número total:	1	

Firma Soldadores	
Nº Lote hilo de soldar	
Dibujado:	Ruben Extremera
Fecha:	05.11.2018
Escala:	1:5

Nº rev.	Revisión	Descripción de revisión	Fecha revisión

MATERIAL: S275JR, SALVO INDICACIÓN — SOLDADURAS

VER PROCEDIMIENTO MARCADO CEE, CORTE, TALADRO Y SOLDADURA — PROYECCIÓN

UNIVERSITAT POLITÈCNICA DE CATALUNYA
BARCELONATECH
Escola Superior d'Enginyeries Industrial, Aeroespacial i Audiovisual de Terrassa

PROYECTO: 18-509
DIBUJO: 18-509/P150

CE 1035

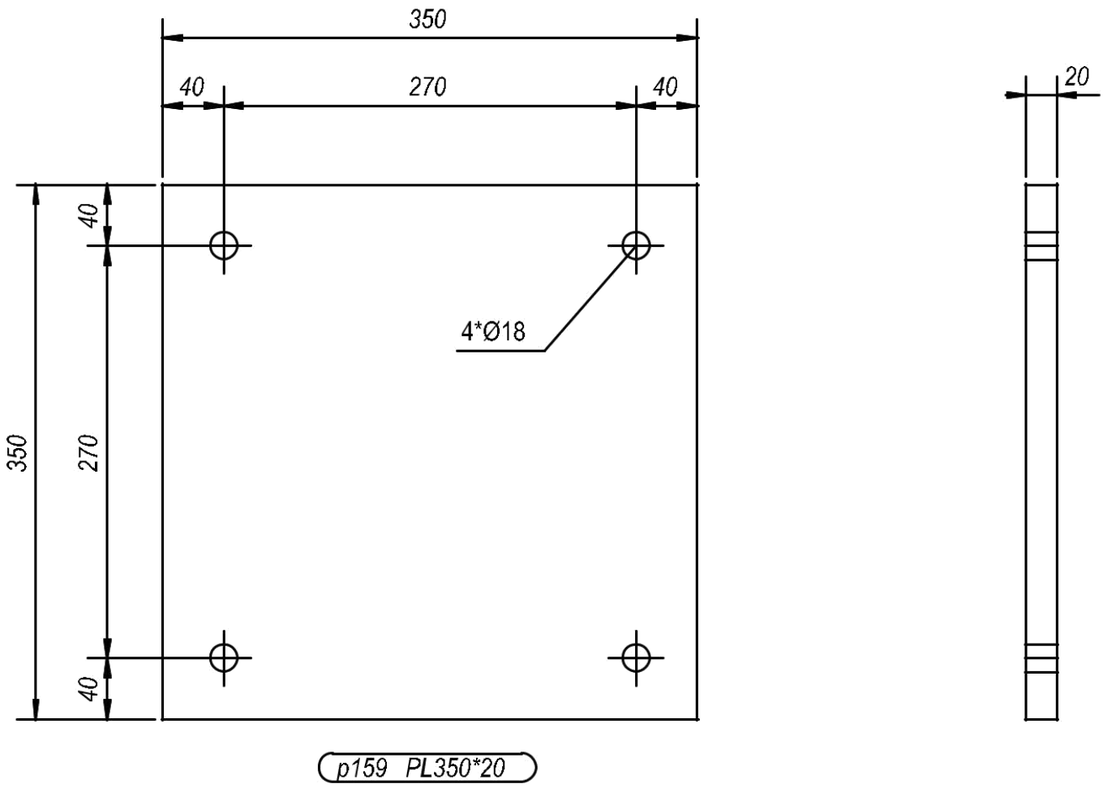

Tekla Structures

Parte	Perfil	Longitud	Número	Conjunto
p159	PL350*20	350	4	CN117
		Número total:	4	

Firma Soldadores	
Nº Lote hilo de soldar	
Dibujado:	Ruben Extremera
Fecha:	05.11.2018
Escala:	1:5

Nº rev.	Revisión	Descripción de revisión	Fecha revisión

MATERIAL: S275JR, SALVO INDICACIÓN — SOLDADURAS

VER PROCEDIMIENTO MARCADO CEE, CORTE, TALADRO Y SOLDADURA — PROYECCIÓN

UNIVERSITAT POLITÈCNICA DE CATALUNYA
BARCELONATECH
Escola Superior d'Enginyeries Industrial, Aeroespacial i Audiovisual de Terrassa

PROYECTO: 18-509
DIBUJO: 18-509/P159

CE 1035

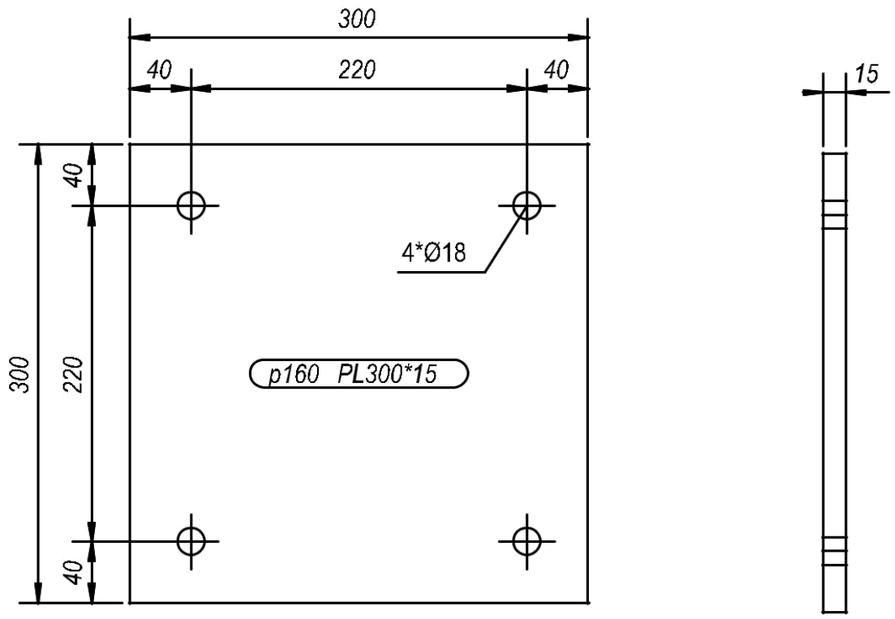

Tekla Structures

Parte	Perfil	Longitud	Número	Conjunto
p160	PL300*15	300	12	CN118
		Número total:	12	

Firma Soldadores	
Nº Lote hilo de soldar	
Dibujado:	Ruben Extremera
Fecha:	05.11.2018
Escala:	1:5

Nº rev.	Revisión	Descripción de revisión	Fecha revisión

MATERIAL: S275JR, SALVO INDICACIÓN — SOLDADURAS

VER PROCEDIMIENTO MARCADO CEE, CORTE, TALADRO Y SOLDADURA — PROYECCIÓN

UNIVERSITAT POLITÈCNICA DE CATALUNYA
BARCELONATECH
Escola Superior d'Enginyeries Industrial, Aeroespacial i Audiovisual de Terrassa

PROYECTO: 18-509
DIBUJO: 18-509/P160

CE 1035

UNIVERSITAT POLITÈCNICA DE CATALUNYA
BARCELONATECH
Escola Superior d'Enginyeries Industrial, Aeroespacial i Audiovisual de Terrassa

ESEIAAT

Degree in Mechanical Engineering

Study of design and calculation of the structure of a house in the municipality of Sant Cugat del Valles.

Annexes

Author: Ruben Extremera Hidalgo
Tutor: Montserrat Sánchez Romero
Terrassa, January 10, 2019

Index

1. Components annex

CDC-HiACRE
PERFILES

OFICINA CENTRAL Tel: 93 575 40 70 Fax: 93 564 88 11 perfiles@cdchiacre.com www.cdchiacre.com

PERFIL: REF. INCOFLUID
70/210/840L.M.
PARA FORJADO COLABORANTE

DIMENSIONES

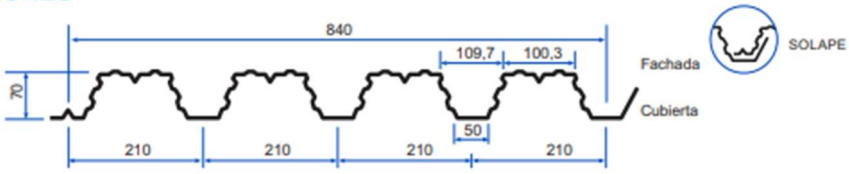

TABLA DE PESOS PROPIOS

Esp	H (cm)				
e (mm)	12	14	16	18	20
0,75	199,84	249,84	299,84	349,84	399,84
1,00	202,76	252,76	302,76	352,76	402,76

Por metro cuadrado de losa según el espesor "e" de la chapa y la altura total "H" de la losa; dado en daN/m.
(1 daN/m^2≈1kp/m^2)
Hormigón de resistencia característica: 25 N/mm^2

NORMATIVA

EUROCODIGO - 4	PROYECTO DE ESTRUCTURAS MIXTAS DE HORMIGÓN Y ACERO
UNE-ENV 1994-1-1	"Reglas generales y reglas para la edificación".
UNE-ENV 1994-1-2	"Reglas generales. Proyecto de estructuras sometidas al fuego".
ENV 1993-1-3	"Cold formed thin gauge members and sheeting".

MATERIAL

Acero de calidad DX51D según UNE-EN 10142.
Acero de calidad estructural S280GD según UNE-EN 10147.
Acero de calidad estructural S320GD según UNE-EN 10147.

Límite elástico nominal	Re = 320 N/mm
Resistencia mínima a la tracción	Rm = 390 N/mm

ARMADURAS DE NEGATIVOS

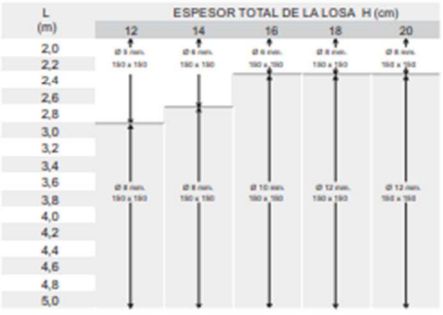

Armaduras de reparto y en condiciones mínimas.

Es muy recomendable recurrir a una solución con malla electrosoldada continua en toda la losa.
La armadura deberá tener un recubrimiento de 20 mm.
Deben disponerse piezas especiales para su elevación respecto a la chapa.
Incluye control de fisuración y retracción.

Acero B500S
f_{yk} = 500 N/mm^2 γ_s = 1.15

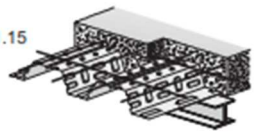

PERFIL: REF. INCOFLUID
70/210/840 L.M.
PARA FORJADO COLABORANTE

		LOSA DE 1 TRAMO					LOSA DE 2 TRAMOS					LOSA DE 3 TRAMOS				
	L(m) \ H(cm)	12	14	16	18	20	12	14	16	18	20	12	14	16	18	20
ESPESOR DE PERFIL 0,75 mm.	2,0	1034	1297	1559	1821	2083	1007	1288	1573	1862	2156	1047	1340	1638	1941	2249
	2,2	831	1042	1253	1464	1675	888	1134	1382	1633	1886	924	1181	1440	1702	1968
	2,4	676	848	1020	1191	1363	791	1008	1227	144	1669	816	1023	1229	1436	1643
	2,6	555	696	837	978	1119	710	892	1072	1252	1433	675	846	1017	1189	1360
	2,8	459	575	692	808	925	594	745	896	1047	1197	563	705	848	991	1134
	3,0	381	477	574	671	768	499	626	753	880	1007	472	592	711	831	951
	3,2	316	397	477	558	638	422	529	636	743	850	397	498	599	700	801
	3,4	263	330	397	464	531	357	448	538	629	720	335	420	505	591	676
	3,6	218	274	329	385	440	302	379	456	533	610	283	355	427	499	571
	3,8	180	226	272	318	364	256	321	387	452	517	238	299	360	421	481
	4,0	147	185	222	260	298	216	272	327	382	437	200	251	303	354	405
	4,2	119	149	180	210	241	182	229	275	322	368	167	210	253	296	339
	4,4	-	118	143	167	191	152	191	230	269	308	139	174	210	246	281
	4,6	-	-	110	129	148	126	159	191	223	256	114	143	172	201	231
	4,8	-	-	-	-	-	103	130	156	183	210	-	115	139	163	186
	5,0	-	-	-	-	-	-	104	126	147	168	-	-	110	128	147
ESPESOR DE PERFIL 1 mm.	2,0	1427	1789	2151	2513	2875	1004	1285	1570	1859	2153	1045	1338	1635	1938	2247
	2,2	1155	1448	1742	2035	2329	885	1131	1379	1630	1884	922	1178	1437	1700	1965
	2,4	948	1189	1430	1671	1912	788	1006	1224	1445	1666	821	1048	1276	1507	1739
	2,6	786	986	1186	1386	1569	708	902	1096	1291	1487	737	940	1143	1347	1553
	2,8	657	825	975	1139	1327	639	814	988	1163	1337	666	849	1031	1214	1397
	3,0	553	675	836	977	1118	581	738	896	1215	1401	606	771	935	1100	1264
	3,2	448	587	707	827	946	530	673	915	1069	1224	553	703	853	1002	1159
	3,4	397	498	600	702	803	485	652	785	918	1050	491	617	742	867	993
	3,6	337	424	510	597	683	447	562	676	790	905	422	530	637	745	853
	3,8	286	360	434	507	581	386	485	584	682	781	363	456	549	642	735
	4,0	243	306	368	431	494	333	419	504	590	675	312	393	473	553	633
	4,2	206	259	312	365	418	288	362	436	510	584	269	338	407	476	545
	4,4	166	218	263	308	353	248	313	377	441	505	231	291	350	410	469
	4,6	114	182	220	258	296	214	269	325	380	435	198	249	300	351	403
	4,8	-	151	182	214	245	184	231	279	326	374	169	213	256	300	344
	5,0	-	120	149	175	200	157	197	238	27	320	143	180	218	255	292

Valores de sobrecarga de uso en daN/m .(1daN/m² ≈ 1kp/m²)

Necesario un apuntalamiento provisional en el centro del vano.

RESISTENCIA AL FUEGO:

Nuestro perfil para forjado colaborante siempre y cuando se coloque correctamente, presenta sin protección adicional, una estabilidad al fuego de 30 minutos.

Esta resistencia de la losa puede ser incrementada mediante los siguientes sistemas:

1.-Colocando un falso techo protector.
2.-Proyectando un material protector ignífugo en la cara inferior.
3.-Mediante la colocación de más armaduras complementarias.

ESTADO LÍMITE:

Los estados límites de deformidad son más restrictivos que los preconizados por EUROCÓDIGO-4. Así, para las cargas de servicio, el corrimiento vertical está limitado a:

Luz < a 3.5 m L/350
Luz ≥ a 3.5 m ..... (L/700) + 5 mm.

ASESORAMIENTO TÉCNICO: Nuestra Oficina Técnica queda a su entera disposición para aconsejar la solución más adecuada, facilitándoles los cálculos realizados por medio de un programa informático exclusivo para nuestro perfil 70/210/840 L.M.

HIT-HY 200 injection mortar

Anchor design (ETAG 001) / Rods&Sleeves / Concrete

Injection mortar system

Hilti HIT- HY 200-A

500 ml foil pack (also available as 330 ml foil pack)

Hilti HIT- HY 200-R

500 ml foil pack (also available as 330 ml foil pack)

Anchor rod:
HIT-V
HIT-V-F
HIT-V-R
HIT-V-HCR
(M8-M30)

Internally threaded sleeve:
HIS-N
HIS-RN
(M8-M20)

Anchor rod:
HIT-Z
HIT-Z-F
HIT-Z-R
(M8-M20)

Benefits

- **SafeSet** technology: drilling and borehole cleaning in one step with Hilti hollow drill bit
- Suitable for non-cracked and cracked concrete C 20/25 to C 50/60
- ETA Approved for seismic performance category C1, C2[a)]
- Maximum load performance in cracked concrete and non-cracked concrete
- High corrosion / corrosion resistance[b)]
- Small edge distance and anchor spacing possible
- Manual cleaning for borehole diameter up to 20mm and $h_e \leq 10d$ for non-cracked concrete only
- Two mortar versions: HY 200-R for slow cure applications and HY 200-A for fast cure applications

a) HIS-N internally threaded sleeves not approved for Seismic.
b) High Corrosion resistant rods available only for HIT-V. Corrosion resistant rods available for HIT-V and HIS-N

Base material

Concrete (non-cracked)

Concrete (cracked)

Installation conditions

Hammer drilled holes

Diamond drilled holes[c)]

Hilti **SafeSet** technology

Variable embedment depth

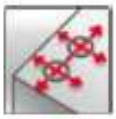

Small edge distance and spacing

Load conditions

Static/ quasi-static

Seismic, ETA-C1, C2[a)]

Fire resistance

Other information

European Technical Assessment

CE conformity

Corrosion resistance[b)]

High corrosion resistance[b)]

PROFIS Anchor design Software

a) HIS-N internally threaded sleeves not approved for Seismic category C2.
b) High Corrosion resistant rods available only for HIT-V. Corrosion resistant rods available for HIT-V and HIS-N
c) Diamond drilling only covered for HIT-Z rods

ELECTRODO BÁSICO

Vandal

PROTECH VACUUM PACK

SMAW

CLASIFICACIÓN

AWS A5.1	E7018-1 H4	A-Nr	1
ISO 2560-A	E 42 4 B 3 2 H5	F-Nr	4
		9606 FM	1

DESCRIPCIÓN GENERAL

Electrodo de revestimiento básico, con bajo contenido en hidrógeno, buenas propiedades de impacto y resistente a fisuración.
Adecuado para soldadura estructural y alto límite elástico con Resistencia a Tracción de 500N/mm².
Arco suave y estable.
Este electrodo es adecuado para soldadura en posición y particularmente en vertical descendente.
Buena eliminación de escoria en juntas estrechas.
Buenas propiedades de impacto a - 40°C

POSICIONES DE SOLDADURA ISO/ASME

TIPO CORRIENTE

CA / CC +

HOMOLOGACIONES

ABS	BV	DNV	GL	TÜV	RINA
3H5, 3Y	3,3Y H	3 YH5	3YH5	+	3,3Y H

COMPOSICIÓN QUÍMICA (% EN PESO) TÍPICA, METAL DEPOSITADO

C	Mn	Si	HDM
0.07	1.2	0.5	3 ml/100 g

PROPIEDADES MECÁNICAS, TÍPICAS, METAL DEPOSITADO

	Condición	Lim. Elástico (N/mm²)	R.Tracción (N/mm²)	Alargamiento (%)	Impacto ISO-V (J) -40°C	Impacto ISO-V (J) -46°C
Requerido: AWS A5.1		min. 399	min. 482	min. 22		27
ISO 2560-A		min. 420	500-640	min. 20	47	
Valores típicos	AW	436	533	28	100	90

DIÁMETROS/EMPAQUETADO

	Diámetro (mm)	2.5	3.2	3.2	4.0	4.0	5.0
	Longitud (mm)	350	350	450	350	450	450
Und.: Cajacartón	Piezas/ unidad	118	73	73	55	55	32
	Peso neto/unidad (kg)	2.60	2.51	3.285	2.81	3.66	3.36
Und.: Protech®	Piezas/ unidad	96	60	60	40	40	30
	Peso neto/unidad (kg)	2.16	2.09	2.75	2.05	2.73	3.13

Identificaciones: Marcado: rotulo VANDAL — Color: gama: naranja

108

ELECTRODO BÁSICO

Vandal

SHAW

MATERIALS TO BE WELDED

Grados acero/Code	Tipo
Acero general estructural	
EN 10025	S185, S235 J0 / J2 / JR, S275 J0 / J2 / JR, S355 J0 / J2 / JR /K2
Chapa naval	
ASTM A 131	Grado A, B, D, E, AH32 hasta incluyendo EH36
Acero fundido	
EN 10213-2	GP 240 GH, GP 280 GH
Acero tubería	
EN 10208-1	L210 GA, L235 GA, L245 GA, L290 GA, L360 GA
EN 10208-2	L245 MB / NB, L290 MB / NB, L360 MB / NB / QB, L415 MB / NB/QB
API 5LX	X42, X46, X52, X56, X60, X65
EN 10216-1	P195 TR1 / TR2, P235 TR1 / TR2, P265 TR1/ TR2
EN 10216-2	P195 GH, P235 GH, P265 GH
EN 10216-3	P275 NL1 / NL2, P355 N/ NH/ NL1 / NL2
Calderería y aparatos a presión	
EN 10028-2	P235GH, P265GH, P295GH, P355GH
Acero de grano fino	
EN 10025 parte 3	S275 N / NL, S355 N / NL, S420 N / NL
EN 10025 parte 4	S275 M / ML, S355 M / ML, S420 M / ML
Otros	Aceros con requerimientos equivalentes a las arriba mencionadas, clasificaciones según ASTM, JIS etc.

HOJA DE CÁLCULO

Diám.x Long (mm)	Rango Corriente (A)	Corriente max. (A)	Tipo cor.	Tiempo - por electrodo a intensidad max - (S)*	Energía (Kj)	V.Dep. (kg/h)	Peso/ 1000 pcs (kg)	Electrodos/ kg metal B	kg Electrodos/ kg metal V/N
2.5x350	70-90	110	CC+	44	137	1,0	22,8	83	1,90
3.2x350	100-130	140	CC+	56	216	1,3	34,4	50	1,72
3.2x450	100-135	140	CC+	68	260	1,4	45	37	1,67
4.0x350	130-180	200	CC+	59	312	1,8	51,7	34	1,76
4.0x450	130-190	200	CC+	77	421	1,9	66,5	24	1,62
5.0x450	220-260	280	CC+	88	709	2,6	105	16	1,67

*Punta 35mm

PARÁMETROS ÓPTIMOS DE SOLDADURA

Diámetro (mm)	Posiciones de soldadura PA/1G	PB/2F	PD/2G	PF/3Gasc	PE/4G
2.5	80A	85A	85A	85A	80A
3.2	120A	115A	115A	115A	110A
4.0	170A	180A	180A	180A	160A
5.0	240A	250A	250A	250A	230A

COMENTARIOS

Se recomienda resecar los electrodos a 350º +/ -25ºC durante 2-4 horas.

www.lincolnelectric.es

LINCOLN ELECTRIC THE WELDING EXPERTS

109

2. Calculation annex

2.1 Section 1

Rolled steels: CTE DB SE-A

Category of use: A. Residential areas

Limit states

E.L.U. of breakage. Rolled steel	CTE Snow level: Altitude less than or equal to 1000 m
Tensions on the ground Displacements	Characteristic actions

Combinations

- **Names of hypotheses**

PP - Own weight
Q 1 Q 1
V 1 V 1
V 2 V 2
V 3 V 3
V 4 V 4
N 1 N 1

- **E.L.U. of breakage. Rolled steel**

Comb.	PP	Q 1	V 1	V 2	V 3	V 4	N 1
1	0.800						
2	1.350						
3	0.800	1.500					
4	1.350	1.500					
5	0.800		1.500				
6	1.350		1.500				
7	0.800	1.050	1.500				
8	1.350	1.050	1.500				
9	0.800	1.500	0.900				
10	1.350	1.500	0.900				
11	0.800			1.500			
12	1.350			1.500			
13	0.800	1.050		1.500			
14	1.350	1.050		1.500			
15	0.800	1.500		0.900			
16	1.350	1.500		0.900			
17	0.800				1.500		
18	1.350				1.500		

Comb.	PP	Q 1	V 1	V 2	V 3	V 4	N 1
19	0.800	1.050			1.500		
20	1.350	1.050			1.500		
21	0.800	1.500			0.900		
22	1.350	1.500			0.900		
23	0.800					1.500	
24	1.350					1.500	
25	0.800	1.050				1.500	
26	1.350	1.050				1.500	
27	0.800	1.500				0.900	
28	1.350	1.500				0.900	
29	0.800						1.500
30	1.350						1.500
31	0.800	1.050					1.500
32	1.350	1.050					1.500
33	0.800		0.900				1.500
34	1.350		0.900				1.500
35	0.800	1.050	0.900				1.500
36	1.350	1.050	0.900				1.500
37	0.800			0.900			1.500
38	1.350			0.900			1.500
39	0.800	1.050		0.900			1.500
40	1.350	1.050		0.900			1.500
41	0.800				0.900		1.500
42	1.350				0.900		1.500
43	0.800	1.050			0.900		1.500
44	1.350	1.050			0.900		1.500
45	0.800					0.900	1.500
46	1.350					0.900	1.500
47	0.800	1.050				0.900	1.500
48	1.350	1.050				0.900	1.500
49	0.800	1.500					0.750
50	1.350	1.500					0.750
51	0.800		1.500				0.750
52	1.350		1.500				0.750
53	0.800	1.050	1.500				0.750
54	1.350	1.050	1.500				0.750
55	0.800	1.500	0.900				0.750
56	1.350	1.500	0.900				0.750
57	0.800			1.500			0.750
58	1.350			1.500			0.750
59	0.800	1.050		1.500			0.750
60	1.350	1.050		1.500			0.750
61	0.800	1.500		0.900			0.750
62	1.350	1.500		0.900			0.750
63	0.800				1.500		0.750
64	1.350				1.500		0.750

Comb.	PP	Q 1	V 1	V 2	V 3	V 4	N 1
65	0.800	1.050			1.500		0.750
66	1.350	1.050			1.500		0.750
67	0.800	1.500			0.900		0.750
68	1.350	1.500			0.900		0.750
69	0.800					1.500	0.750
70	1.350					1.500	0.750
71	0.800	1.050				1.500	0.750
72	1.350	1.050				1.500	0.750
73	0.800	1.500				0.900	0.750
74	1.350	1.500				0.900	0.750

2.2 Section 2

2.2.1 Hypotheses

Efforts in pillar, by hypothesis											
Pillar	Hypotheses	Effort	Positions in the pillar								
			0.000 m	0.383 m	0.766 m	1.149 m	1.533 m	1.916 m	2.299 m	2.682 m	3.065 m
N16/N20	Own weight	N	-8.961	-8.941	-8.922	-8.902	-8.883	-8.863	-8.843	-8.824	-8.804
		Vy	-0.217	-0.217	-0.217	-0.217	-0.217	-0.217	-0.217	-0.217	-0.217
		Vz	0.779	0.779	0.779	0.779	0.779	0.779	0.779	0.779	0.779
		Mt	0.000	0.000	0.000	0.000	0.000	0.000	0.000	0.000	0.000
		My	0.880	0.581	0.283	-0.016	-0.314	-0.613	-0.911	-1.210	-1.508
		Mz	-0.242	-0.159	-0.075	0.008	0.091	0.174	0.258	0.341	0.424
	Q 1	N	-6.361	-6.361	-6.361	-6.361	-6.361	-6.361	-6.361	-6.361	-6.361
		Vy	-0.171	-0.171	-0.171	-0.171	-0.171	-0.171	-0.171	-0.171	-0.171
		Vz	0.644	0.644	0.644	0.644	0.644	0.644	0.644	0.644	0.644
		Mt	0.000	0.000	0.000	0.000	0.000	0.000	0.000	0.000	0.000
		My	0.719	0.473	0.226	-0.021	-0.267	-0.514	-0.760	-1.007	-1.254
		Mz	-0.192	-0.127	-0.062	0.004	0.069	0.135	0.200	0.266	0.331
	V 1	N	0.381	0.381	0.381	0.381	0.381	0.381	0.381	0.381	0.381
		Vy	0.006	0.006	0.006	0.006	0.006	0.006	0.006	0.006	0.006
		Vz	-0.556	-0.556	-0.556	-0.556	-0.556	-0.556	-0.556	-0.556	-0.556
		Mt	0.000	0.000	0.000	0.000	0.000	0.000	0.000	0.000	0.000
		My	-1.062	-0.849	-0.636	-0.423	-0.210	0.003	0.215	0.428	0.641
		Mz	0.006	0.004	0.002	-0.001	-0.003	-0.005	-0.007	-0.010	-0.012
	V 2	N	-0.456	-0.456	-0.456	-0.456	-0.456	-0.456	-0.456	-0.456	-0.456
		Vy	-0.009	-0.009	-0.009	-0.009	-0.009	-0.009	-0.009	-0.009	-0.009
		Vz	0.624	0.624	0.624	0.624	0.624	0.624	0.624	0.624	0.624
		Mt	0.001	0.001	0.001	0.001	0.001	0.001	0.001	0.001	0.001
		My	1.205	0.966	0.727	0.488	0.249	0.010	-0.229	-0.468	-0.707
		Mz	-0.011	-0.007	-0.004	0.000	0.004	0.007	0.011	0.014	0.018
	V 3	N	2.125	2.125	2.125	2.125	2.125	2.125	2.125	2.125	2.125
		Vy	-0.675	-0.675	-0.675	-0.675	-0.675	-0.675	-0.675	-0.675	-0.675

Efforts in pillar, by hypothesis											
Pillar	Hypotheses	Effort	Positions in the pillar								
			0.000 m	0.383 m	0.766 m	1.149 m	1.533 m	1.916 m	2.299 m	2.682 m	3.065 m
		Vz	-0.004	-0.004	-0.004	-0.004	-0.004	-0.004	-0.004	-0.004	-0.004
		Mt	-0.001	-0.001	-0.001	-0.001	-0.001	-0.001	-0.001	-0.001	-0.001
		My	-0.005	-0.003	-0.001	0.000	0.002	0.004	0.005	0.007	0.009
		Mz	-1.086	-0.828	-0.570	-0.311	-0.053	0.206	0.464	0.723	0.981
	V 4	N	-1.739	-1.739	-1.739	-1.739	-1.739	-1.739	-1.739	-1.739	-1.739
		Vy	0.554	0.554	0.554	0.554	0.554	0.554	0.554	0.554	0.554
		Vz	0.004	0.004	0.004	0.004	0.004	0.004	0.004	0.004	0.004
		Mt	0.000	0.000	0.000	0.000	0.000	0.000	0.000	0.000	0.000
		My	0.004	0.003	0.001	0.000	-0.001	-0.003	-0.004	-0.005	-0.007
		Mz	0.892	0.680	0.468	0.255	0.043	-0.169	-0.381	-0.593	-0.805
	N 1	N	-1.134	-1.134	-1.134	-1.134	-1.134	-1.134	-1.134	-1.134	-1.134
		Vy	-0.006	-0.006	-0.006	-0.006	-0.006	-0.006	-0.006	-0.006	-0.006
		Vz	-0.042	-0.042	-0.042	-0.042	-0.042	-0.042	-0.042	-0.042	-0.042
		Mt	0.000	0.000	0.000	0.000	0.000	0.000	0.000	0.000	0.000
		My	-0.032	-0.016	0.001	0.017	0.033	0.049	0.065	0.082	0.098
		Mz	-0.002	0.000	0.002	0.005	0.007	0.010	0.012	0.014	0.017

2.2.2 Combinations

Efforts in bars, by hypothesis												
Pillar	Combination		Efort	Positions in the pillar								
	Type	Description		0.000 m	0.383 m	0.766 m	1.149 m	1.533 m	1.916 m	2.299 m	2.682 m	3.065 m
N16/N20	Rolled steel	0.8·PP	N	-7.169	-7.153	-7.137	-7.122	-7.106	-7.090	-7.075	-7.059	-7.043
			Vy	-0.174	-0.174	-0.174	-0.174	-0.174	-0.174	-0.174	-0.174	-0.174
			Vz	0.623	0.623	0.623	0.623	0.623	0.623	0.623	0.623	0.623
			Mt	0.000	0.000	0.000	0.000	0.000	0.000	0.000	0.000	0.000
			My	0.704	0.465	0.226	-0.013	-0.252	-0.490	-0.729	-0.968	-1.207
			Mz	-0.193	-0.127	-0.060	0.006	0.073	0.140	0.206	0.273	0.339
		1.35·PP	N	-12.098	-12.071	-12.045	-12.018	-11.991	-11.965	-11.938	-11.912	-11.885
			Vy	-0.293	-0.293	-0.293	-0.293	-0.293	-0.293	-0.293	-0.293	-0.293
			Vz	1.052	1.052	1.052	1.052	1.052	1.052	1.052	1.052	1.052
			Mt	0.000	0.000	0.000	0.000	0.000	0.000	0.000	0.000	0.000
			My	1.187	0.784	0.381	-0.022	-0.424	-0.827	-1.230	-1.633	-2.036
			Mz	-0.326	-0.214	-0.102	0.011	0.123	0.236	0.348	0.460	0.573
		0.8·PP+1.5·Q1	N	-16.710	-16.694	-16.679	-16.663	-16.647	-16.631	-16.616	-16.600	-16.584
			Vy	-0.430	-0.430	-0.430	-0.430	-0.430	-0.430	-0.430	-0.430	-0.430
			Vz	1.589	1.589	1.589	1.589	1.589	1.589	1.589	1.589	1.589
			Mt	0.000	0.000	0.000	0.000	0.000	0.000	0.000	0.000	0.000
			My	1.782	1.174	0.565	-0.044	-0.652	-1.261	-1.870	-2.478	-3.087
			Mz	-0.482	-0.317	-0.153	0.012	0.177	0.342	0.506	0.671	0.836
		1.35·PP+1.5·Q1	N	-21.639	-21.612	-21.586	-21.559	-21.533	-21.506	-21.480	-21.453	-21.427

Efforts in bars, by hypothesis												
Pillar	Combination		Efort	Positions in the pillar								
	Type	Description		0.000 m	0.383 m	0.766 m	1.149 m	1.533 m	1.916 m	2.299 m	2.682 m	3.065 m
			Vy	-0.550	-0.550	-0.550	-0.550	-0.550	-0.550	-0.550	-0.550	-0.550
			Vz	2.017	2.017	2.017	2.017	2.017	2.017	2.017	2.017	2.017
			Mt	0.000	0.000	0.000	0.000	0.000	0.000	0.000	0.000	0.000
			My	2.266	1.493	0.720	-0.052	-0.825	-1.598	-2.371	-3.144	-3.917
			Mz	-0.615	-0.405	-0.194	0.017	0.227	0.438	0.648	0.859	1.069
		0.8·PP+1.5·V1	N	-6.597	-6.581	-6.565	-6.550	-6.534	-6.518	-6.502	-6.487	-6.471
			Vy	-0.165	-0.165	-0.165	-0.165	-0.165	-0.165	-0.165	-0.165	-0.165
			Vz	-0.210	-0.210	-0.210	-0.210	-0.210	-0.210	-0.210	-0.210	-0.210
			Mt	0.000	0.000	0.000	0.000	0.000	0.000	0.000	0.000	0.000
			My	-0.889	-0.808	-0.728	-0.647	-0.567	-0.486	-0.406	-0.325	-0.245
			Mz	-0.184	-0.121	-0.058	0.005	0.069	0.132	0.195	0.258	0.321
		1.35·PP+1.5·V1	N	-11.525	-11.499	-11.472	-11.446	-11.419	-11.393	-11.366	-11.340	-11.313
			Vy	-0.284	-0.284	-0.284	-0.284	-0.284	-0.284	-0.284	-0.284	-0.284
			Vz	0.218	0.218	0.218	0.218	0.218	0.218	0.218	0.218	0.218
			Mt	0.000	0.000	0.000	0.000	0.000	0.000	0.000	0.000	0.000
			My	-0.405	-0.489	-0.572	-0.656	-0.740	-0.823	-0.907	-0.991	-1.075
			Mz	-0.317	-0.208	-0.099	0.010	0.119	0.228	0.337	0.446	0.555
		0.8·PP+1.05·Q1+1.5·V1	N	-13.275	-13.260	-13.244	-13.228	-13.213	-13.197	-13.181	-13.165	-13.150
			Vy	-0.344	-0.344	-0.344	-0.344	-0.344	-0.344	-0.344	-0.344	-0.344
			Vz	0.466	0.466	0.466	0.466	0.466	0.466	0.466	0.466	0.466
			Mt	0.000	0.000	0.000	0.000	0.000	0.000	0.000	0.000	0.000
			My	-0.133	-0.312	-0.490	-0.669	-0.847	-1.026	-1.204	-1.383	-1.561
			Mz	-0.386	-0.254	-0.123	0.009	0.141	0.273	0.405	0.537	0.669
		1.35·PP+1.05·Q1+1.5·V1	N	-18.204	-18.178	-18.151	-18.125	-18.098	-18.072	-18.045	-18.018	-17.992
			Vy	-0.464	-0.464	-0.464	-0.464	-0.464	-0.464	-0.464	-0.464	-0.464
			Vz	0.894	0.894	0.894	0.894	0.894	0.894	0.894	0.894	0.894
			Mt	0.000	0.000	0.000	0.000	0.000	0.000	0.000	0.000	0.000
			My	0.350	0.008	-0.335	-0.678	-1.020	-1.363	-1.706	-2.048	-2.391
			Mz	-0.519	-0.342	-0.164	0.014	0.191	0.369	0.547	0.725	0.902
		0.8·PP+1.5·Q1+0.9·V1	N	-16.367	-16.351	-16.335	-16.320	-16.304	-16.288	-16.272	-16.257	-16.241
			Vy	-0.425	-0.425	-0.425	-0.425	-0.425	-0.425	-0.425	-0.425	-0.425
			Vz	1.089	1.089	1.089	1.089	1.089	1.089	1.089	1.089	1.089
			Mt	0.000	0.000	0.000	0.000	0.000	0.000	0.000	0.000	0.000
			My	0.827	0.410	-0.007	-0.424	-0.841	-1.259	-1.676	-2.093	-2.510
			Mz	-0.477	-0.314	-0.151	0.012	0.174	0.337	0.500	0.662	0.825
		1.35·PP+1.5·Q1+0.9·V1	N	-21.295	-21.269	-21.242	-21.216	-21.189	-21.163	-21.136	-21.110	-21.083
			Vy	-0.544	-0.544	-0.544	-0.544	-0.544	-0.544	-0.544	-0.544	-0.544
			Vz	1.517	1.517	1.517	1.517	1.517	1.517	1.517	1.517	1.517
			Mt	0.000	0.000	0.000	0.000	0.000	0.000	0.000	0.000	0.000

Efforts in bars, by hypothesis												
Pillar	Combination		Efort	Positions in the pillar								
	Type	Description		0.000 m	0.383 m	0.766 m	1.149 m	1.533 m	1.916 m	2.299 m	2.682 m	3.065 m
			My	1.311	0.730	0.148	-0.433	-1.014	-1.596	-2.177	-2.758	-3.340
			Mz	-0.610	-0.401	-0.193	0.016	0.224	0.433	0.641	0.850	1.058
		0.8·PP+1.5·V2	N	-7.853	-7.837	-7.821	-7.806	-7.790	-7.774	-7.758	-7.743	-7.727
			Vy	-0.188	-0.188	-0.188	-0.188	-0.188	-0.188	-0.188	-0.188	-0.188
			Vz	1.559	1.559	1.559	1.559	1.559	1.559	1.559	1.559	1.559
			Mt	0.001	0.001	0.001	0.001	0.001	0.001	0.001	0.001	0.001
			My	2.511	1.914	1.317	0.719	0.122	-0.475	-1.073	-1.670	-2.268
			Mz	-0.209	-0.138	-0.066	0.006	0.078	0.150	0.222	0.294	0.366
		1.35·PP+1.5·V2	N	-12.781	-12.755	-12.728	-12.702	-12.675	-12.649	-12.622	-12.596	-12.569
			Vy	-0.307	-0.307	-0.307	-0.307	-0.307	-0.307	-0.307	-0.307	-0.307
			Vz	1.988	1.988	1.988	1.988	1.988	1.988	1.988	1.988	1.988
			Mt	0.001	0.001	0.001	0.001	0.001	0.001	0.001	0.001	0.001
			My	2.995	2.234	1.472	0.711	-0.051	-0.813	-1.574	-2.336	-3.097
			Mz	-0.342	-0.225	-0.107	0.011	0.129	0.246	0.364	0.482	0.599
		0.8·PP+1.05·Q1+1.5·V2	N	-14.531	-14.516	-14.500	-14.484	-14.469	-14.453	-14.437	-14.421	-14.406
			Vy	-0.367	-0.367	-0.367	-0.367	-0.367	-0.367	-0.367	-0.367	-0.367
			Vz	2.235	2.235	2.235	2.235	2.235	2.235	2.235	2.235	2.235
			Mt	0.001	0.001	0.001	0.001	0.001	0.001	0.001	0.001	0.001
			My	3.267	2.410	1.554	0.698	-0.159	-1.015	-1.871	-2.728	-3.584
			Mz	-0.412	-0.271	-0.130	0.010	0.151	0.292	0.432	0.573	0.714
		1.35·PP+1.05·Q1+1.5·V2	N	-19.460	-19.434	-19.407	-19.381	-19.354	-19.327	-19.301	-19.274	-19.248
			Vy	-0.487	-0.487	-0.487	-0.487	-0.487	-0.487	-0.487	-0.487	-0.487
			Vz	2.664	2.664	2.664	2.664	2.664	2.664	2.664	2.664	2.664
			Mt	0.001	0.001	0.001	0.001	0.001	0.001	0.001	0.001	0.001
			My	3.750	2.730	1.709	0.689	-0.332	-1.352	-2.373	-3.393	-4.413
			Mz	-0.545	-0.358	-0.172	0.015	0.201	0.388	0.574	0.761	0.947
		0.8·PP+1.5·Q1+0.9·V2	N	-17.120	-17.105	-17.089	-17.073	-17.057	-17.042	-17.026	-17.010	-16.995
			Vy	-0.438	-0.438	-0.438	-0.438	-0.438	-0.438	-0.438	-0.438	-0.438
			Vz	2.150	2.150	2.150	2.150	2.150	2.150	2.150	2.150	2.150
			Mt	0.001	0.001	0.001	0.001	0.001	0.001	0.001	0.001	0.001
			My	2.867	2.043	1.219	0.396	-0.428	-1.252	-2.076	-2.900	-3.724
			Mz	-0.492	-0.324	-0.156	0.012	0.180	0.348	0.516	0.684	0.852
		1.35·PP+1.5·Q1+0.9·V2	N	-22.049	-22.022	-21.996	-21.969	-21.943	-21.916	-21.890	-21.863	-21.837
			Vy	-0.558	-0.558	-0.558	-0.558	-0.558	-0.558	-0.558	-0.558	-0.558
			Vz	2.579	2.579	2.579	2.579	2.579	2.579	2.579	2.579	2.579
			Mt	0.001	0.001	0.001	0.001	0.001	0.001	0.001	0.001	0.001
			My	3.351	2.363	1.375	0.387	-0.601	-1.589	-2.577	-3.565	-4.553
			Mz	-0.625	-0.411	-0.197	0.017	0.230	0.444	0.658	0.871	1.085
		0.8·PP+1.5·V3	N	-3.982	-3.966	-3.950	-3.935	-3.919	-3.903	-3.888	-3.872	-3.856
			Vy	-1.186	-1.186	-1.186	-1.186	-1.186	-1.186	-1.186	-1.186	-1.186
			Vz	0.617	0.617	0.617	0.617	0.617	0.617	0.617	0.617	0.617

Efforts in bars, by hypothesis												
Pillar	Combination		Efort	Positions in the pillar								
	Type	Description		0.000 m	0.383 m	0.766 m	1.149 m	1.533 m	1.916 m	2.299 m	2.682 m	3.065 m
			Mt	-0.001	-0.001	-0.001	-0.001	-0.001	-0.001	-0.001	-0.001	-0.001
			My	0.697	0.460	0.224	-0.012	-0.249	-0.485	-0.721	-0.958	-1.194
			Mz	-1.823	-1.369	-0.915	-0.460	-0.006	0.448	0.903	1.357	1.811
		1.35·PP+1.5·V3	N	-8.910	-8.884	-8.857	-8.831	-8.804	-8.778	-8.751	-8.725	-8.698
			Vy	-1.305	-1.305	-1.305	-1.305	-1.305	-1.305	-1.305	-1.305	-1.305
			Vz	1.045	1.045	1.045	1.045	1.045	1.045	1.045	1.045	1.045
			Mt	-0.001	-0.001	-0.001	-0.001	-0.001	-0.001	-0.001	-0.001	-0.001
			My	1.180	0.780	0.379	-0.021	-0.422	-0.822	-1.223	-1.623	-2.024
			Mz	-1.956	-1.456	-0.956	-0.456	0.044	0.544	1.044	1.544	2.044
		0.8·PP+1.05·Q1+1.5·V3	N	-10.661	-10.645	-10.629	-10.613	-10.598	-10.582	-10.566	-10.551	-10.535
			Vy	-1.365	-1.365	-1.365	-1.365	-1.365	-1.365	-1.365	-1.365	-1.365
			Vz	1.293	1.293	1.293	1.293	1.293	1.293	1.293	1.293	1.293
			Mt	-0.001	-0.001	-0.001	-0.001	-0.001	-0.001	-0.001	-0.001	-0.001
			My	1.452	0.956	0.461	-0.034	-0.529	-1.024	-1.520	-2.015	-2.510
			Mz	-2.025	-1.502	-0.979	-0.456	0.067	0.590	1.113	1.636	2.159
		1.35·PP+1.05·Q1+1.5·V3	N	-15.589	-15.563	-15.536	-15.510	-15.483	-15.457	-15.430	-15.404	-15.377
			Vy	-1.485	-1.485	-1.485	-1.485	-1.485	-1.485	-1.485	-1.485	-1.485
			Vz	1.721	1.721	1.721	1.721	1.721	1.721	1.721	1.721	1.721
			Mt	0.000	0.000	0.000	0.000	0.000	0.000	0.000	0.000	0.000
			My	1.935	1.276	0.617	-0.043	-0.702	-1.362	-2.021	-2.680	-3.340
			Mz	-2.158	-1.589	-1.021	-0.452	0.117	0.686	1.254	1.823	2.392
		0.8·PP+1.5·Q1+0.9·V3	N	-14.798	-14.782	-14.766	-14.751	-14.735	-14.719	-14.703	-14.688	-14.672
			Vy	-1.037	-1.037	-1.037	-1.037	-1.037	-1.037	-1.037	-1.037	-1.037
			Vz	1.585	1.585	1.585	1.585	1.585	1.585	1.585	1.585	1.585
			Mt	0.000	0.000	0.000	0.000	0.000	0.000	0.000	0.000	0.000
			My	1.778	1.171	0.564	-0.043	-0.651	-1.258	-1.865	-2.472	-3.079
			Mz	-1.460	-1.063	-0.665	-0.268	0.129	0.527	0.924	1.322	1.719
		1.35·PP+1.5·Q1+0.9·V3	N	-19.726	-19.700	-19.673	-19.647	-19.620	-19.594	-19.567	-19.541	-19.514
			Vy	-1.157	-1.157	-1.157	-1.157	-1.157	-1.157	-1.157	-1.157	-1.157
			Vz	2.013	2.013	2.013	2.013	2.013	2.013	2.013	2.013	2.013
			Mt	0.000	0.000	0.000	0.000	0.000	0.000	0.000	0.000	0.000
			My	2.262	1.491	0.719	-0.052	-0.824	-1.595	-2.366	-3.138	-3.909
			Mz	-1.593	-1.150	-0.707	-0.263	0.180	0.623	1.066	1.509	1.952
		0.8·PP+1.5·V4	N	-9.777	-9.761	-9.746	-9.730	-9.714	-9.699	-9.683	-9.667	-9.652
			Vy	0.657	0.657	0.657	0.657	0.657	0.657	0.657	0.657	0.657
			Vz	0.629	0.629	0.629	0.629	0.629	0.629	0.629	0.629	0.629
			Mt	0.001	0.001	0.001	0.001	0.001	0.001	0.001	0.001	0.001
			My	0.710	0.469	0.228	-0.013	-0.254	-0.494	-0.735	-0.976	-1.217
			Mz	1.144	0.893	0.641	0.389	0.138	-0.114	-0.365	-0.617	-0.869
		1.35·PP+1.5·V4	N	-14.706	-14.679	-14.653	-14.626	-14.600	-14.573	-14.547	-14.520	-14.494
			Vy	0.537	0.537	0.537	0.537	0.537	0.537	0.537	0.537	0.537

Efforts in bars, by hypothesis												
Pillar	Combination		Efort	Positions in the pillar								
	Type	Description		0.000 m	0.383 m	0.766 m	1.149 m	1.533 m	1.916 m	2.299 m	2.682 m	3.065 m
			Vz	1.057	1.057	1.057	1.057	1.057	1.057	1.057	1.057	1.057
			Mt	0.001	0.001	0.001	0.001	0.001	0.001	0.001	0.001	0.001
			My	1.193	0.788	0.383	-0.022	-0.427	-0.832	-1.237	-1.642	-2.047
			Mz	1.011	0.806	0.600	0.394	0.188	-0.018	-0.224	-0.430	-0.635
		0.8·PP+1.05·Q1+1.5·V4	N	-16.456	-16.440	-16.425	-16.409	-16.393	-16.377	-16.362	-16.346	-16.330
			Vy	0.478	0.478	0.478	0.478	0.478	0.478	0.478	0.478	0.478
			Vz	1.304	1.304	1.304	1.304	1.304	1.304	1.304	1.304	1.304
			Mt	0.001	0.001	0.001	0.001	0.001	0.001	0.001	0.001	0.001
			My	1.465	0.965	0.465	-0.034	-0.534	-1.034	-1.534	-2.033	-2.533
			Mz	0.942	0.759	0.576	0.393	0.211	0.028	-0.155	-0.338	-0.521
		1.35·PP+1.05·Q1+1.5·V4	N	-21.385	-21.358	-21.332	-21.305	-21.279	-21.252	-21.226	-21.199	-21.172
			Vy	0.358	0.358	0.358	0.358	0.358	0.358	0.358	0.358	0.358
			Vz	1.733	1.733	1.733	1.733	1.733	1.733	1.733	1.733	1.733
			Mt	0.001	0.001	0.001	0.001	0.001	0.001	0.001	0.001	0.001
			My	1.948	1.285	0.621	-0.043	-0.707	-1.371	-2.035	-2.699	-3.363
			Mz	0.809	0.672	0.535	0.398	0.261	0.124	-0.014	-0.151	-0.288
		0.8·PP+1.5·Q1+0.9·V4	N	-18.275	-18.259	-18.244	-18.228	-18.212	-18.196	-18.181	-18.165	-18.149
			Vy	0.068	0.068	0.068	0.068	0.068	0.068	0.068	0.068	0.068
			Vz	1.592	1.592	1.592	1.592	1.592	1.592	1.592	1.592	1.592
			Mt	0.001	0.001	0.001	0.001	0.001	0.001	0.001	0.001	0.001
			My	1.786	1.176	0.566	-0.044	-0.654	-1.263	-1.873	-2.483	-3.093
			Mz	0.321	0.294	0.268	0.242	0.216	0.190	0.163	0.137	0.111
		1.35·PP+1.5·Q1+0.9·V4	N	-23.204	-23.177	-23.151	-23.124	-23.098	-23.071	-23.045	-23.018	-22.992
			Vy	-0.051	-0.051	-0.051	-0.051	-0.051	-0.051	-0.051	-0.051	-0.051
			Vz	2.020	2.020	2.020	2.020	2.020	2.020	2.020	2.020	2.020
			Mt	0.001	0.001	0.001	0.001	0.001	0.001	0.001	0.001	0.001
			My	2.270	1.496	0.722	-0.052	-0.827	-1.601	-2.375	-3.149	-3.923
			Mz	0.188	0.207	0.227	0.246	0.266	0.286	0.305	0.325	0.344
		0.8·PP+1.5·N1	N	-8.870	-8.854	-8.838	-8.822	-8.807	-8.791	-8.775	-8.760	-8.744
			Vy	-0.183	-0.183	-0.183	-0.183	-0.183	-0.183	-0.183	-0.183	-0.183
			Vz	0.560	0.560	0.560	0.560	0.560	0.560	0.560	0.560	0.560
			Mt	0.000	0.000	0.000	0.000	0.000	0.000	0.000	0.000	0.000
			My	0.656	0.441	0.227	0.012	-0.202	-0.417	-0.631	-0.845	-1.060
			Mz	-0.197	-0.127	-0.057	0.014	0.084	0.154	0.224	0.294	0.365
		1.35·PP+1.5·N1	N	-13.798	-13.772	-13.745	-13.719	-13.692	-13.666	-13.639	-13.613	-13.586
			Vy	-0.303	-0.303	-0.303	-0.303	-0.303	-0.303	-0.303	-0.303	-0.303
			Vz	0.988	0.988	0.988	0.988	0.988	0.988	0.988	0.988	0.988
			Mt	0.000	0.000	0.000	0.000	0.000	0.000	0.000	0.000	0.000
			My	1.139	0.761	0.382	0.004	-0.375	-0.754	-1.132	-1.511	-1.889
			Mz	-0.330	-0.214	-0.098	0.018	0.134	0.250	0.366	0.482	0.598
		0.8·PP+1.05·Q1+1.5·N1	N	-15.548	-15.533	-15.517	-15.501	-15.486	-15.470	-15.454	-15.438	-15.423
			Vy	-0.362	-0.362	-0.362	-0.362	-0.362	-0.362	-0.362	-0.362	-0.362
			Vz	1.236	1.236	1.236	1.236	1.236	1.236	1.236	1.236	1.236
			Mt	0.000	0.000	0.000	0.000	0.000	0.000	0.000	0.000	0.000
			My	1.411	0.937	0.464	-0.009	-0.483	-0.956	-1.429	-1.903	-2.376

Efforts in bars, by hypothesis												
Pillar	Combination		Efort	Positions in the pillar								
	Type	Description		0.000 m	0.383 m	0.766 m	1.149 m	1.533 m	1.916 m	2.299 m	2.682 m	3.065 m
			Mz	-0.399	-0.260	-0.121	0.018	0.157	0.295	0.434	0.573	0.712
		1.35·PP+1.05·Q1+1.5·N1	N	-20.477	-20.450	-20.424	-20.397	-20.371	-20.344	-20.318	-20.291	-20.265
			Vy	-0.482	-0.482	-0.482	-0.482	-0.482	-0.482	-0.482	-0.482	-0.482
			Vz	1.664	1.664	1.664	1.664	1.664	1.664	1.664	1.664	1.664
			Mt	0.000	0.000	0.000	0.000	0.000	0.000	0.000	0.000	0.000
			My	1.895	1.257	0.620	-0.018	-0.656	-1.293	-1.931	-2.568	-3.206
			Mz	-0.532	-0.347	-0.163	0.022	0.207	0.391	0.576	0.761	0.945
		0.8·PP+0.9·V1+1.5·N1	N	-8.526	-8.511	-8.495	-8.479	-8.463	-8.448	-8.432	-8.416	-8.401
			Vy	-0.178	-0.178	-0.178	-0.178	-0.178	-0.178	-0.178	-0.178	-0.178
			Vz	0.060	0.060	0.060	0.060	0.060	0.060	0.060	0.060	0.060
			Mt	0.000	0.000	0.000	0.000	0.000	0.000	0.000	0.000	0.000
			My	-0.300	-0.323	-0.345	-0.368	-0.391	-0.414	-0.437	-0.460	-0.483
			Mz	-0.191	-0.123	-0.055	0.013	0.081	0.149	0.217	0.286	0.354
		1.35·PP+0.9·V1+1.5·N1	N	-13.455	-13.428	-13.402	-13.375	-13.349	-13.322	-13.296	-13.269	-13.243
			Vy	-0.297	-0.297	-0.297	-0.297	-0.297	-0.297	-0.297	-0.297	-0.297
			Vz	0.488	0.488	0.488	0.488	0.488	0.488	0.488	0.488	0.488
			Mt	0.000	0.000	0.000	0.000	0.000	0.000	0.000	0.000	0.000
			My	0.184	-0.003	-0.190	-0.377	-0.564	-0.751	-0.938	-1.125	-1.312
			Mz	-0.324	-0.211	-0.096	0.017	0.131	0.245	0.359	0.473	0.587
		0.8·PP+1.05·Q1+0.9·V1+1.5·N1	N	-15.205	-15.189	-15.174	-15.158	-15.142	-15.126	-15.111	-15.095	-15.079
			Vy	-0.357	-0.357	-0.357	-0.357	-0.357	-0.357	-0.357	-0.357	-0.357
			Vz	0.736	0.736	0.736	0.736	0.736	0.736	0.736	0.736	0.736
			Mt	0.000	0.000	0.000	0.000	0.000	0.000	0.000	0.000	0.000
			My	0.456	0.174	-0.108	-0.390	-0.672	-0.954	-1.235	-1.517	-1.799
			Mz	-0.393	-0.257	-0.120	0.017	0.154	0.291	0.428	0.564	0.701
		1.35·PP+1.05·Q1+0.9·V1+1.5·N1	N	-20.134	-20.107	-20.081	-20.054	-20.028	-20.001	-19.975	-19.948	-19.922
			Vy	-0.477	-0.477	-0.477	-0.477	-0.477	-0.477	-0.477	-0.477	-0.477
			Vz	1.164	1.164	1.164	1.164	1.164	1.164	1.164	1.164	1.164
			Mt	0.000	0.000	0.000	0.000	0.000	0.000	0.000	0.000	0.000
			My	0.939	0.493	0.047	-0.399	-0.845	-1.291	-1.737	-2.183	-2.629
			Mz	-0.526	-0.344	-0.161	0.021	0.204	0.387	0.569	0.752	0.935
		0.8·PP+0.9·V2+1.5·N1	N	-9.280	-9.264	-9.248	-9.233	-9.217	-9.201	-9.186	-9.170	-9.154
			Vy	-0.192	-0.192	-0.192	-0.192	-0.192	-0.192	-0.192	-0.192	-0.192
			Vz	1.121	1.121	1.121	1.121	1.121	1.121	1.121	1.121	1.121
			Mt	0.001	0.001	0.001	0.001	0.001	0.001	0.001	0.001	0.001
			My	1.740	1.311	0.881	0.452	0.022	-0.408	-0.837	-1.267	-1.696
			Mz	-0.206	-0.133	-0.060	0.014	0.087	0.160	0.234	0.307	0.381
		1.35·PP+0.9·V2+1.5·N1	N	-14.208	-14.182	-14.155	-14.129	-14.102	-14.076	-14.049	-14.023	-13.996
			Vy	-0.311	-0.311	-0.311	-0.311	-0.311	-0.311	-0.311	-0.311	-0.311
			Vz	1.550	1.550	1.550	1.550	1.550	1.550	1.550	1.550	1.550

Efforts in bars, by hypothesis												
Pillar	Combination		Efort	Positions in the pillar								
	Type	Description		0.000 m	0.383 m	0.766 m	1.149 m	1.533 m	1.916 m	2.299 m	2.682 m	3.065 m
			Mt	0.001	0.001	0.001	0.001	0.001	0.001	0.001	0.001	0.001
			My	2.224	1.630	1.037	0.443	-0.151	-0.745	-1.338	-1.932	-2.526
			Mz	-0.339	-0.220	-0.101	0.018	0.137	0.256	0.376	0.495	0.614
		0.8·PP+1.05·Q1+0.9·V2+1.5·N1	N	-15.959	-15.943	-15.927	-15.911	-15.896	-15.880	-15.864	-15.849	-15.833
			Vy	-0.371	-0.371	-0.371	-0.371	-0.371	-0.371	-0.371	-0.371	-0.371
			Vz	1.797	1.797	1.797	1.797	1.797	1.797	1.797	1.797	1.797
			Mt	0.001	0.001	0.001	0.001	0.001	0.001	0.001	0.001	0.001
			My	2.496	1.807	1.119	0.430	-0.259	-0.947	-1.636	-2.324	-3.013
			Mz	-0.409	-0.267	-0.124	0.018	0.160	0.302	0.444	0.586	0.728
		1.35·PP+1.05·Q1+0.9·V2+1.5·N1	N	-20.887	-20.861	-20.834	-20.808	-20.781	-20.755	-20.728	-20.702	-20.675
			Vy	-0.490	-0.490	-0.490	-0.490	-0.490	-0.490	-0.490	-0.490	-0.490
			Vz	2.226	2.226	2.226	2.226	2.226	2.226	2.226	2.226	2.226
			Mt	0.001	0.001	0.001	0.001	0.001	0.001	0.001	0.001	0.001
			My	2.979	2.127	1.274	0.421	-0.431	-1.284	-2.137	-2.990	-3.842
			Mz	-0.542	-0.354	-0.166	0.022	0.210	0.398	0.586	0.774	0.961
		0.8·PP+0.9·V3+1.5·N1	N	-6.957	-6.942	-6.926	-6.910	-6.895	-6.879	-6.863	-6.847	-6.832
			Vy	-0.790	-0.790	-0.790	-0.790	-0.790	-0.790	-0.790	-0.790	-0.790
			Vz	0.556	0.556	0.556	0.556	0.556	0.556	0.556	0.556	0.556
			Mt	0.000	0.000	0.000	0.000	0.000	0.000	0.000	0.000	0.000
			My	0.651	0.439	0.226	0.013	-0.200	-0.413	-0.626	-0.839	-1.052
			Mz	-1.175	-0.872	-0.569	-0.266	0.036	0.339	0.642	0.945	1.248
		1.35·PP+0.9·V3+1.5·N1	N	-11.886	-11.859	-11.833	-11.806	-11.780	-11.753	-11.727	-11.700	-11.674
			Vy	-0.910	-0.910	-0.910	-0.910	-0.910	-0.910	-0.910	-0.910	-0.910
			Vz	0.984	0.984	0.984	0.984	0.984	0.984	0.984	0.984	0.984
			Mt	0.000	0.000	0.000	0.000	0.000	0.000	0.000	0.000	0.000
			My	1.135	0.758	0.381	0.004	-0.373	-0.750	-1.128	-1.505	-1.882
			Mz	-1.308	-0.959	-0.611	-0.262	0.087	0.435	0.784	1.132	1.481
		0.8·PP+1.05·Q1+0.9·V3+1.5·N1	N	-13.636	-13.620	-13.605	-13.589	-13.573	-13.558	-13.542	-13.526	-13.510
			Vy	-0.970	-0.970	-0.970	-0.970	-0.970	-0.970	-0.970	-0.970	-0.970
			Vz	1.232	1.232	1.232	1.232	1.232	1.232	1.232	1.232	1.232
			Mt	0.000	0.000	0.000	0.000	0.000	0.000	0.000	0.000	0.000
			My	1.407	0.935	0.463	-0.009	-0.481	-0.953	-1.425	-1.897	-2.368
			Mz	-1.377	-1.005	-0.634	-0.262	0.109	0.481	0.852	1.224	1.595
		1.35·PP+1.05·Q1+0.9·V3+1.5·N1	N	-18.565	-18.538	-18.512	-18.485	-18.459	-18.432	-18.406	-18.379	-18.353
			Vy	-1.089	-1.089	-1.089	-1.089	-1.089	-1.089	-1.089	-1.089	-1.089
			Vz	1.660	1.660	1.660	1.660	1.660	1.660	1.660	1.660	1.660
			Mt	0.000	0.000	0.000	0.000	0.000	0.000	0.000	0.000	0.000
			My	1.890	1.254	0.618	-0.018	-0.654	-1.290	-1.926	-2.562	-3.198
			Mz	-1.510	-1.093	-0.675	-0.258	0.159	0.577	0.994	1.411	1.828
		0.8·PP+0.9·V4+1.5·N1	N	-10.435	-10.419	-10.403	-10.387	-10.372	-10.356	-10.340	-10.325	-10.309
			Vy	0.315	0.315	0.315	0.315	0.315	0.315	0.315	0.315	0.315

Efforts in bars, by hypothesis												
Pillar	Combination		Efort	Positions in the pillar								
	Type	Description		0.000 m	0.383 m	0.766 m	1.149 m	1.533 m	1.916 m	2.299 m	2.682 m	3.065 m
			Vz	0.563	0.563	0.563	0.563	0.563	0.563	0.563	0.563	0.563
			Mt	0.001	0.001	0.001	0.001	0.001	0.001	0.001	0.001	0.001
			My	0.659	0.444	0.228	0.012	-0.203	-0.419	-0.635	-0.850	-1.066
			Mz	0.606	0.485	0.364	0.244	0.123	0.002	-0.119	-0.240	-0.360
		1.35·PP+0.9·V4+1.5·N1	N	-15.363	-15.337	-15.310	-15.284	-15.257	-15.231	-15.204	-15.178	-15.151
			Vy	0.196	0.196	0.196	0.196	0.196	0.196	0.196	0.196	0.196
			Vz	0.991	0.991	0.991	0.991	0.991	0.991	0.991	0.991	0.991
			Mt	0.001	0.001	0.001	0.001	0.001	0.001	0.001	0.001	0.001
			My	1.143	0.763	0.383	0.004	-0.376	-0.756	-1.136	-1.516	-1.896
			Mz	0.473	0.398	0.323	0.248	0.173	0.098	0.023	-0.052	-0.127
		0.8·PP+1.05·Q1+0.9·V4+1.5·N1	N	-17.113	-17.098	-17.082	-17.066	-17.051	-17.035	-17.019	-17.003	-16.988
			Vy	0.136	0.136	0.136	0.136	0.136	0.136	0.136	0.136	0.136
			Vz	1.239	1.239	1.239	1.239	1.239	1.239	1.239	1.239	1.239
			Mt	0.001	0.001	0.001	0.001	0.001	0.001	0.001	0.001	0.001
			My	1.414	0.940	0.465	-0.009	-0.484	-0.958	-1.433	-1.908	-2.382
			Mz	0.404	0.352	0.300	0.248	0.195	0.143	0.091	0.039	-0.013
		1.35·PP+1.05·Q1+0.9·V4+1.5·N1	N	-22.042	-22.015	-21.989	-21.962	-21.936	-21.909	-21.883	-21.856	-21.830
			Vy	0.016	0.016	0.016	0.016	0.016	0.016	0.016	0.016	0.016
			Vz	1.667	1.667	1.667	1.667	1.667	1.667	1.667	1.667	1.667
			Mt	0.001	0.001	0.001	0.001	0.001	0.001	0.001	0.001	0.001
			My	1.898	1.259	0.621	-0.018	-0.657	-1.296	-1.934	-2.573	-3.212
			Mz	0.271	0.264	0.258	0.252	0.246	0.239	0.233	0.227	0.221
		0.8·PP+1.5·Q1+0.75·N1	N	-17.560	-17.545	-17.529	-17.513	-17.498	-17.482	-17.466	-17.450	-17.435
			Vy	-0.435	-0.435	-0.435	-0.435	-0.435	-0.435	-0.435	-0.435	-0.435
			Vz	1.557	1.557	1.557	1.557	1.557	1.557	1.557	1.557	1.557
			Mt	0.000	0.000	0.000	0.000	0.000	0.000	0.000	0.000	0.000
			My	1.758	1.162	0.565	-0.031	-0.628	-1.224	-1.821	-2.417	-3.014
			Mz	-0.484	-0.317	-0.151	0.016	0.182	0.349	0.515	0.682	0.848
		1.35·PP+1.5·Q1+0.75·N1	N	-22.489	-22.462	-22.436	-22.409	-22.383	-22.356	-22.330	-22.303	-22.277
			Vy	-0.554	-0.554	-0.554	-0.554	-0.554	-0.554	-0.554	-0.554	-0.554
			Vz	1.985	1.985	1.985	1.985	1.985	1.985	1.985	1.985	1.985
			Mt	0.000	0.000	0.000	0.000	0.000	0.000	0.000	0.000	0.000
			My	2.242	1.482	0.721	-0.040	-0.801	-1.561	-2.322	-3.083	-3.843
			Mz	-0.617	-0.405	-0.192	0.020	0.232	0.445	0.657	0.869	1.082
		0.8·PP+1.5·V1+0.75·N1	N	-7.447	-7.431	-7.416	-7.400	-7.384	-7.368	-7.353	-7.337	-7.321
			Vy	-0.170	-0.170	-0.170	-0.170	-0.170	-0.170	-0.170	-0.170	-0.170
			Vz	-0.242	-0.242	-0.242	-0.242	-0.242	-0.242	-0.242	-0.242	-0.242
			Mt	0.000	0.000	0.000	0.000	0.000	0.000	0.000	0.000	0.000
			My	-0.913	-0.820	-0.727	-0.635	-0.542	-0.449	-0.357	-0.264	-0.172
			Mz	-0.186	-0.121	-0.056	0.009	0.074	0.139	0.204	0.269	0.334
		1.35·PP+1.5·V1+0.75·N1	N	-12.376	-12.349	-12.323	-12.296	-12.270	-12.243	-12.217	-12.190	-12.164
			Vy	-0.289	-0.289	-0.289	-0.289	-0.289	-0.289	-0.289	-0.289	-0.289
			Vz	0.187	0.187	0.187	0.187	0.187	0.187	0.187	0.187	0.187
			Mt	0.000	0.000	0.000	0.000	0.000	0.000	0.000	0.000	0.000

Efforts in bars, by hypothesis												
Pillar	Combination		Efort	Positions in the pillar								
	Type	Description		0.000 m	0.383 m	0.766 m	1.149 m	1.533 m	1.916 m	2.299 m	2.682 m	3.065 m
			My	-0.429	-0.500	-0.572	-0.643	-0.715	-0.787	-0.858	-0.930	-1.001
			Mz	-0.319	-0.208	-0.097	0.013	0.124	0.235	0.346	0.457	0.567
		0.8·PP+1.05·Q1+1.5·V1+0.75·N1	N	-14.126	-14.110	-14.094	-14.079	-14.063	-14.047	-14.032	-14.016	-14.000
			Vy	-0.349	-0.349	-0.349	-0.349	-0.349	-0.349	-0.349	-0.349	-0.349
			Vz	0.434	0.434	0.434	0.434	0.434	0.434	0.434	0.434	0.434
			Mt	0.000	0.000	0.000	0.000	0.000	0.000	0.000	0.000	0.000
			My	-0.157	-0.324	-0.490	-0.656	-0.823	-0.989	-1.155	-1.321	-1.488
			Mz	-0.388	-0.254	-0.121	0.013	0.147	0.280	0.414	0.548	0.681
		1.35·PP+1.05·Q1+1.5·V1+0.75·N1	N	-19.054	-19.028	-19.001	-18.975	-18.948	-18.922	-18.895	-18.869	-18.842
			Vy	-0.468	-0.468	-0.468	-0.468	-0.468	-0.468	-0.468	-0.468	-0.468
			Vz	0.863	0.863	0.863	0.863	0.863	0.863	0.863	0.863	0.863
			Mt	0.000	0.000	0.000	0.000	0.000	0.000	0.000	0.000	0.000
			My	0.326	-0.004	-0.335	-0.665	-0.996	-1.326	-1.656	-1.987	-2.317
			Mz	-0.521	-0.342	-0.162	0.017	0.197	0.376	0.556	0.735	0.915
		0.8·PP+1.5·Q1+0.9·V1+0.75·N1	N	-17.217	-17.201	-17.186	-17.170	-17.154	-17.138	-17.123	-17.107	-17.091
			Vy	-0.429	-0.429	-0.429	-0.429	-0.429	-0.429	-0.429	-0.429	-0.429
			Vz	1.057	1.057	1.057	1.057	1.057	1.057	1.057	1.057	1.057
			Mt	0.000	0.000	0.000	0.000	0.000	0.000	0.000	0.000	0.000
			My	0.803	0.398	-0.007	-0.412	-0.817	-1.222	-1.627	-2.032	-2.437
			Mz	-0.478	-0.314	-0.149	0.015	0.180	0.344	0.509	0.673	0.838
		1.35·PP+1.5·Q1+0.9·V1+0.75·N1	N	-22.146	-22.119	-22.093	-22.066	-22.040	-22.013	-21.987	-21.960	-21.934
			Vy	-0.549	-0.549	-0.549	-0.549	-0.549	-0.549	-0.549	-0.549	-0.549
			Vz	1.485	1.485	1.485	1.485	1.485	1.485	1.485	1.485	1.485
			Mt	0.000	0.000	0.000	0.000	0.000	0.000	0.000	0.000	0.000
			My	1.287	0.718	0.149	-0.421	-0.990	-1.559	-2.128	-2.697	-3.266
			Mz	-0.611	-0.401	-0.191	0.020	0.230	0.440	0.650	0.861	1.071
		0.8·PP+1.5·V2+0.75·N1	N	-8.703	-8.687	-8.672	-8.656	-8.640	-8.624	-8.609	-8.593	-8.577
			Vy	-0.192	-0.192	-0.192	-0.192	-0.192	-0.192	-0.192	-0.192	-0.192
			Vz	1.527	1.527	1.527	1.527	1.527	1.527	1.527	1.527	1.527
			Mt	0.001	0.001	0.001	0.001	0.001	0.001	0.001	0.001	0.001
			My	2.488	1.902	1.317	0.732	0.147	-0.439	-1.024	-1.609	-2.194
			Mz	-0.211	-0.138	-0.064	0.010	0.084	0.158	0.231	0.305	0.379
		1.35·PP+1.5·V2+0.75·N1	N	-13.632	-13.605	-13.579	-13.552	-13.526	-13.499	-13.473	-13.446	-13.420
			Vy	-0.312	-0.312	-0.312	-0.312	-0.312	-0.312	-0.312	-0.312	-0.312
			Vz	1.956	1.956	1.956	1.956	1.956	1.956	1.956	1.956	1.956
			Mt	0.001	0.001	0.001	0.001	0.001	0.001	0.001	0.001	0.001
			My	2.971	2.222	1.472	0.723	-0.026	-0.776	-1.525	-2.274	-3.024
			Mz	-0.344	-0.225	-0.105	0.014	0.134	0.253	0.373	0.493	0.612
		0.8·PP+1.05·Q1+1.5·V2+0.75·N1	N	-15.382	-15.366	-15.350	-15.335	-15.319	-15.303	-15.288	-15.272	-15.256

Efforts in bars, by hypothesis												
Pillar	Combination		Efort	Positions in the pillar								
	Type	Description		0.000 m	0.383 m	0.766 m	1.149 m	1.533 m	1.916 m	2.299 m	2.682 m	3.065 m
			Vy	-0.372	-0.372	-0.372	-0.372	-0.372	-0.372	-0.372	-0.372	-0.372
			Vz	2.203	2.203	2.203	2.203	2.203	2.203	2.203	2.203	2.203
			Mt	0.001	0.001	0.001	0.001	0.001	0.001	0.001	0.001	0.001
			My	3.243	2.399	1.554	0.710	-0.134	-0.978	-1.822	-2.666	-3.510
			Mz	-0.413	-0.271	-0.128	0.014	0.157	0.299	0.441	0.584	0.726
		1.35·PP+1.05·Q1+1.5·V2+0.75·N1	N	-20.310	-20.284	-20.257	-20.231	-20.204	-20.178	-20.151	-20.125	-20.098
			Vy	-0.491	-0.491	-0.491	-0.491	-0.491	-0.491	-0.491	-0.491	-0.491
			Vz	2.632	2.632	2.632	2.632	2.632	2.632	2.632	2.632	2.632
			Mt	0.001	0.001	0.001	0.001	0.001	0.001	0.001	0.001	0.001
			My	3.726	2.718	1.710	0.701	-0.307	-1.315	-2.323	-3.332	-4.340
			Mz	-0.546	-0.358	-0.170	0.018	0.207	0.395	0.583	0.771	0.960
		0.8·PP+1.5·Q1+0.9·V2+0.75·N1	N	-17.971	-17.955	-17.939	-17.923	-17.908	-17.892	-17.876	-17.861	-17.845
			Vy	-0.443	-0.443	-0.443	-0.443	-0.443	-0.443	-0.443	-0.443	-0.443
			Vz	2.119	2.119	2.119	2.119	2.119	2.119	2.119	2.119	2.119
			Mt	0.001	0.001	0.001	0.001	0.001	0.001	0.001	0.001	0.001
			My	2.843	2.032	1.220	0.408	-0.403	-1.215	-2.027	-2.838	-3.650
			Mz	-0.493	-0.324	-0.154	0.016	0.186	0.355	0.525	0.695	0.864
		1.35·PP+1.5·Q1+0.9·V2+0.75·N1	N	-22.899	-22.873	-22.846	-22.820	-22.793	-22.767	-22.740	-22.714	-22.687
			Vy	-0.563	-0.563	-0.563	-0.563	-0.563	-0.563	-0.563	-0.563	-0.563
			Vz	2.547	2.547	2.547	2.547	2.547	2.547	2.547	2.547	2.547
			Mt	0.001	0.001	0.001	0.001	0.001	0.001	0.001	0.001	0.001
			My	3.327	2.351	1.375	0.399	-0.576	-1.552	-2.528	-3.504	-4.480
			Mz	-0.626	-0.411	-0.195	0.020	0.236	0.451	0.667	0.882	1.098
		0.8·PP+1.5·V3+0.75·N1	N	-4.832	-4.816	-4.801	-4.785	-4.769	-4.754	-4.738	-4.722	-4.706
			Vy	-1.190	-1.190	-1.190	-1.190	-1.190	-1.190	-1.190	-1.190	-1.190
			Vz	0.585	0.585	0.585	0.585	0.585	0.585	0.585	0.585	0.585
			Mt	-0.001	-0.001	-0.001	-0.001	-0.001	-0.001	-0.001	-0.001	-0.001
			My	0.673	0.448	0.224	0.000	-0.224	-0.448	-0.672	-0.896	-1.121
			Mz	-1.825	-1.369	-0.913	-0.457	-0.001	0.456	0.912	1.368	1.824
		1.35·PP+1.5·V3+0.75·N1	N	-9.761	-9.734	-9.708	-9.681	-9.655	-9.628	-9.602	-9.575	-9.549
			Vy	-1.310	-1.310	-1.310	-1.310	-1.310	-1.310	-1.310	-1.310	-1.310
			Vz	1.014	1.014	1.014	1.014	1.014	1.014	1.014	1.014	1.014
			Mt	-0.001	-0.001	-0.001	-0.001	-0.001	-0.001	-0.001	-0.001	-0.001
			My	1.156	0.768	0.380	-0.009	-0.397	-0.785	-1.174	-1.562	-1.950
			Mz	-1.958	-1.456	-0.954	-0.452	0.050	0.551	1.053	1.555	2.057
		0.8·PP+1.05·Q1+1.5·V3+0.75·N1	N	-11.511	-11.495	-11.479	-11.464	-11.448	-11.432	-11.417	-11.401	-11.385
			Vy	-1.370	-1.370	-1.370	-1.370	-1.370	-1.370	-1.370	-1.370	-1.370
			Vz	1.261	1.261	1.261	1.261	1.261	1.261	1.261	1.261	1.261
			Mt	-0.001	-0.001	-0.001	-0.001	-0.001	-0.001	-0.001	-0.001	-0.001
			My	1.428	0.945	0.462	-0.021	-0.504	-0.988	-1.471	-1.954	-2.437

Efforts in bars, by hypothesis												
Pillar	Combination		Efort	Positions in the pillar								
	Type	Description		0.000 m	0.383 m	0.766 m	1.149 m	1.533 m	1.916 m	2.299 m	2.682 m	3.065 m
			Mz	-2.027	-1.502	-0.977	-0.453	0.072	0.597	1.122	1.646	2.171
		1.35·PP+1.05·Q1+1.5·V3+0.75·N1	N	-16.440	-16.413	-16.387	-16.360	-16.333	-16.307	-16.280	-16.254	-16.227
			Vy	-1.489	-1.489	-1.489	-1.489	-1.489	-1.489	-1.489	-1.489	-1.489
			Vz	1.689	1.689	1.689	1.689	1.689	1.689	1.689	1.689	1.689
			Mt	0.000	0.000	0.000	0.000	0.000	0.000	0.000	0.000	0.000
			My	1.911	1.264	0.617	-0.030	-0.677	-1.325	-1.972	-2.619	-3.266
			Mz	-2.160	-1.589	-1.019	-0.448	0.122	0.693	1.263	1.834	2.405
		0.8·PP+1.5·Q1+0.9·V3+0.75·N1	N	-15.648	-15.632	-15.617	-15.601	-15.585	-15.570	-15.554	-15.538	-15.522
			Vy	-1.042	-1.042	-1.042	-1.042	-1.042	-1.042	-1.042	-1.042	-1.042
			Vz	1.553	1.553	1.553	1.553	1.553	1.553	1.553	1.553	1.553
			Mt	0.000	0.000	0.000	0.000	0.000	0.000	0.000	0.000	0.000
			My	1.754	1.159	0.564	-0.031	-0.626	-1.221	-1.816	-2.411	-3.006
			Mz	-1.462	-1.063	-0.663	-0.264	0.135	0.534	0.933	1.332	1.731
		1.35·PP+1.5·Q1+0.9·V3+0.75·N1	N	-20.577	-20.550	-20.524	-20.497	-20.471	-20.444	-20.418	-20.391	-20.365
			Vy	-1.161	-1.161	-1.161	-1.161	-1.161	-1.161	-1.161	-1.161	-1.161
			Vz	1.982	1.982	1.982	1.982	1.982	1.982	1.982	1.982	1.982
			Mt	0.000	0.000	0.000	0.000	0.000	0.000	0.000	0.000	0.000
			My	2.238	1.479	0.720	-0.040	-0.799	-1.558	-2.317	-3.076	-3.836
			Mz	-1.595	-1.150	-0.705	-0.260	0.185	0.630	1.075	1.520	1.965
		0.8·PP+1.5·V4+0.75·N1	N	-10.628	-10.612	-10.596	-10.580	-10.565	-10.549	-10.533	-10.518	-10.502
			Vy	0.652	0.652	0.652	0.652	0.652	0.652	0.652	0.652	0.652
			Vz	0.597	0.597	0.597	0.597	0.597	0.597	0.597	0.597	0.597
			Mt	0.001	0.001	0.001	0.001	0.001	0.001	0.001	0.001	0.001
			My	0.686	0.457	0.228	0.000	-0.229	-0.458	-0.686	-0.915	-1.143
			Mz	1.143	0.893	0.643	0.393	0.143	-0.107	-0.356	-0.606	-0.856
		1.35·PP+1.5·V4+0.75·N1	N	-15.556	-15.530	-15.503	-15.477	-15.450	-15.424	-15.397	-15.371	-15.344
			Vy	0.533	0.533	0.533	0.533	0.533	0.533	0.533	0.533	0.533
			Vz	1.025	1.025	1.025	1.025	1.025	1.025	1.025	1.025	1.025
			Mt	0.001	0.001	0.001	0.001	0.001	0.001	0.001	0.001	0.001
			My	1.169	0.777	0.384	-0.009	-0.402	-0.795	-1.187	-1.580	-1.973
			Mz	1.010	0.806	0.602	0.397	0.193	-0.011	-0.215	-0.419	-0.623
		0.8·PP+1.05·Q1+1.5·V4+0.75·N1	N	-17.306	-17.291	-17.275	-17.259	-17.243	-17.228	-17.212	-17.196	-17.181
			Vy	0.473	0.473	0.473	0.473	0.473	0.473	0.473	0.473	0.473
			Vz	1.273	1.273	1.273	1.273	1.273	1.273	1.273	1.273	1.273
			Mt	0.001	0.001	0.001	0.001	0.001	0.001	0.001	0.001	0.001
			My	1.441	0.953	0.466	-0.022	-0.509	-0.997	-1.485	-1.972	-2.460
			Mz	0.941	0.759	0.578	0.397	0.216	0.035	-0.146	-0.327	-0.509
		1.35·PP+1.05·Q1+1.5·V4+0.75·N1	N	-22.235	-22.208	-22.182	-22.155	-22.129	-22.102	-22.076	-22.049	-22.023
			Vy	0.353	0.353	0.353	0.353	0.353	0.353	0.353	0.353	0.353
			Vz	1.701	1.701	1.701	1.701	1.701	1.701	1.701	1.701	1.701
			Mt	0.001	0.001	0.001	0.001	0.001	0.001	0.001	0.001	0.001
			My	1.925	1.273	0.621	-0.031	-0.682	-1.334	-1.986	-2.638	-3.289
			Mz	0.808	0.672	0.537	0.402	0.266	0.131	-0.005	-0.140	-0.275

Efforts in bars, by hypothesis													
Pillar	Combination		Efort	Positions in the pillar									
	Type	Description		0.000 m	0.383 m	0.766 m	1.149 m	1.533 m	1.916 m	2.299 m	2.682 m	3.065 m
		0.8·PP+1.5·Q1+0.9·V4+0.75·N1	N	-19.125	-19.110	-19.094	-19.078	-19.062	-19.047	-19.031	-19.015	-19.000
			Vy	0.064	0.064	0.064	0.064	0.064	0.064	0.064	0.064	0.064
			Vz	1.560	1.560	1.560	1.560	1.560	1.560	1.560	1.560	1.560
			Mt	0.001	0.001	0.001	0.001	0.001	0.001	0.001	0.001	0.001
			My	1.762	1.164	0.567	-0.031	-0.629	-1.227	-1.824	-2.422	-3.020
			Mz	0.319	0.294	0.270	0.246	0.221	0.197	0.172	0.148	0.124
		1.35·PP+1.5·Q1+0.9·V4+0.75·N1	N	-24.054	-24.027	-24.001	-23.974	-23.948	-23.921	-23.895	-23.868	-23.842
			Vy	-0.056	-0.056	-0.056	-0.056	-0.056	-0.056	-0.056	-0.056	-0.056
			Vz	1.989	1.989	1.989	1.989	1.989	1.989	1.989	1.989	1.989
			Mt	0.001	0.001	0.001	0.001	0.001	0.001	0.001	0.001	0.001
			My	2.246	1.484	0.722	-0.040	-0.802	-1.564	-2.326	-3.087	-3.849
			Mz	0.186	0.207	0.229	0.250	0.271	0.293	0.314	0.335	0.357

2.3 Section 3

Section: HE 180 B
Material: Steel (S275)

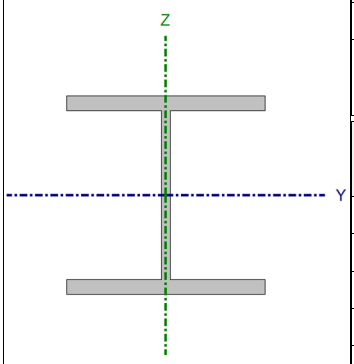

Nodes		Length (m)	Mechanical characteristics			
Initial	Final		Area (cm²)	I_y(1) (cm4)	I_z(1) (cm4)	I_t(2) (cm4)
N16	N20	3.200	65.30	3831.00	1363.00	42.16

Notes:
(1) Inertia with respect to the indicated axis
(2) Uniform torsional moment of inertia

	Buckling		Lateral buckling	
	XY plane	XZ plane	Top fl.	Bot. fl.
β	1.00	1.00	0.00	0.00
L_K	3.200	3.200	0.000	0.000
C_m	1.000	1.000	1.000	1.000
C_1	-		1.000	

Notation:
β: Buckling coefficient
L_K: Buckling length (m)
C_m: Moment coefficient
C_1: Critical moment modification factor

Bar	CHECKS (CTE DB SE-A)															Status
	$\bar{\lambda}$	λ_w	N_t	N_c	M_Y	M_Z	V_Z	V_Y	M_YV_Z	M_ZV_Y	NM_YM_Z	$NM_YM_ZV_YV_Z$	M_t	M_tV_Z	M_tV_Y	
N16/N20	$\bar{\lambda}$ < 2.0 Verified	$\lambda_w \le \lambda_{w,max}$ Verified	N_{Ed} = 0.00 D.N.P.(1)	x: 0 m η = 21.0	x: 3.065 m η = 35.4	x: 3.065 m η = 39.0	η = 8.5	η = 1.8	η < 0.1	η < 0.1	x: 3.065 m η = 74.4	η < 0.1	η = 0.3	η = 8.5	η = 1.8	**VERIFIED η = 74.4**

Bar	CHECKS (CTE DB SE-A)															Status
	$\bar{\lambda}$	λ_w	N_t	N_c	M_Y	M_Z	V_Z	V_Y	M_YV_Z	M_ZV_Y	NM_YM_Z	$NM_YM_ZV_YV_Z$	M_t	M_tV_Z	M_tV_Y	

Notation:
$\bar{\lambda}$: Slenderness limit
λ_w: Crushing of the web induced by the compressed flange
N_t: Resistance to axial tension
N_c: Compression resistance
M_Y: Y - Axis bending resistance
M_Z: Z - Axis bending resistance
V_Z: Resistance to shear in the Z direction
V_Y: Resistance to shear in the Y direction
M_YV_Z: Combined bending moment Y and shear force Z resistance
M_ZV_Y: Combined bending moment Z and shear force Y resistance
NM_YM_Z: Combined bending and axial resistance
$NM_YM_ZV_YV_Z$: Combined bending, axial and shear resistance
M_t: Torsional resistance
M_tV_Z: Combined Z shear and torsional resistance
M_tV_Y: Combined Y shear and torsional resistance
x: Distance to the origin of the bar
η: Usage coefficient (%)
D.N.P.: Not applicable

Checks that do not proceed (D.N.P.):
(1) The check does not proceed, as there is no tensile axial force.

Slenderness limit (CTE DB SE-A, Articles 6.3.1 and 6.3.2.1 - Table 6.3)

The reduced slenderness $\bar{\lambda}$ of the bars in compression must be less than 2.0.

$$\bar{\lambda} = \sqrt{\frac{A \cdot f_y}{N_{cr}}}$$

$\bar{\lambda}$: ***0.81*** ✓

Where:

Class: Section class, depending on its deformation capacity and development of plastic resistance of the compressed elements of a section. **Class** : *1*

A: Area of the gross section for class 1, 2 and 3 sections. **A** : *65.30* cm²

f_y: Yield strength. (CTE DB SE-A, Table 4.1) **f_y** : *275.00* MPa

N_{cr}: Critical elastic buckling axial force. **N_{cr}** : *2758.77* kN

The critical elastic buckling axial force **N_{cr}** is the smallest of the following values a), b) and c):

a) Critical elastic buckling axial force with respect to the Y axis. **$N_{cr,y}$** : *7754.10* kN

$$N_{cr,y} = \frac{\pi^2 \cdot E \cdot I_y}{L_{ky}^2}$$

b) Critical elastic buckling axial force with respect to the Z axis. **$N_{cr,z}$** : *2758.77* kN

$$N_{cr,z} = \frac{\pi^2 \cdot E \cdot I_z}{L_{kz}^2}$$

c) Critical elastic buckling axial force due to torsion. **$N_{cr,T}$** : ∞

$$N_{cr,T} = \frac{1}{i_0^2} \cdot \left[G \cdot I_t + \frac{\pi^2 \cdot E \cdot I_w}{L_{kt}^2} \right]$$

Where:

I_y: Moment of inertia of the gross section, with respect to the Y-axis. **I_y** : *3831.00* cm4

I_z: Moment of inertia of the gross section, with respect to the Z-axis. **I_z** : *1363.00* cm4

I_t: Uniform torsional moment of inertia. **I_t** : *42.16* cm4

I_w: Section warping constant. **I_w** : *93750.00* cm6

E: Modulus of Elasticity. **E** : *210000* MPa

G: Elastic modulus of steel.	**G** :	*81000*	MPa
L_{ky}: Effective buckling length due to bending, with respect to the Y axis.	**L_{ky}** :	*3.200*	m
L_{kz}: Effective buckling length due to bending, with respect to the Z axis.	**L_{kz}** :	*3.200*	m
L_{kt}: Effective buckling length due to torsion.	**L_{kt}** :	*0.000*	m
i_0: Polar radius of gyration of the gross section, with respect to the centre of torsion.	**i_0** :	*8.92*	cm

$$i_0 = \left(i_y^2 + i_z^2 + y_0^2 + z_0^2\right)^{0.5}$$

Where:

i_y , i_z: Radii of gyration of the gross section, with respect to the main axes of inertia Y and Z.	**i_y** :	*7.66*	cm
	i_z :	*4.57*	cm
y_0 , z_0: Coordinates of the torsional centre in the direction of the main axes Y and Z, respectively, relative to the centre of gravity of the section.	**y_0** :	*0.00*	mm
	z_0 :	*0.00*	mm

<u>Crushing of the web induced by the compressed flange</u> (CYPE criteria, based on: Eurocode 3 EN 1993-1-5: 2006, Article 8)

The following criteria must be satisfied:

$$\frac{h_w}{t_w} \leq k \frac{E}{f_{yf}} \sqrt{\frac{A_w}{A_{fc,ef}}}$$

17.88 ≤ 164.04 ✓

Where:

h_w: Height of the web.	**h_w** :	*152.00*	mm
t_w: Web thickness.	**t_w** :	*8.50*	mm
A_w: Area of the web.	**A_w** :	*12.92*	cm²
$A_{fc,ef}$: Reduced area of the compressed flange.	**$A_{fc,ef}$** :	*25.20*	cm²
k: Coefficient which depends on the class of the section.	**k** :	*0.30*	
E: Modulus of Elasticity.	**E** :	*210000*	MPa
f_{yf}: Steel elastic limit of the compressed flange.	**f_{yf}** :	*275.00*	MPa

Where:

$$f_{yf} = f_y$$

<u>Resistance to axial tension</u> (CTE DB SE-A, Article 6.2.3)

The check does not proceed, as there is no tensile axial force.

Compression resistance (CTE DB SE-A, Article 6.2.5)

The following criteria must be satisfied:

$$\eta = \frac{N_{c,Ed}}{N_{c,Rd}} \leq 1$$

η : ***0.138*** ✓

$$\eta = \frac{N_{c,Ed}}{N_{b,Rd}} \leq 1$$

η : ***0.210*** ✓

The worst case design force occurs at node N16, for load combination 1.35·SW+1.5·Q1+0.9·V4+0.75·N1.

$N_{c,Ed}$: Worst case design compressive axial force. **$N_{c,Ed}$** : *235.97* kN

The normal design compression force **$N_{c,Rd}$** should be taken as:

$$N_{c,Rd} = A \cdot f_{yd}$$

$N_{c,Rd}$: *1710.24* kN

Where:

Class: Section class, depending on its deformation capacity and development of plastic resistance of the compressed elements of a section. **Class** : *1*

A: Area of the gross section for class 1, 2 and 3 sections. **A** : *65.30* cm²

f_{yd}: Steel design strength. **f_{yd}** : *261.90* MPa

$$f_{yd} = f_y / \gamma_{M0}$$

Where:

f_y: Yield strength. (CTE DB SE-A, Table 4.1) **f_y** : *275.00* MPa

γ_{M0}: Partial safety factor of the material. **γ_{M0}** : *1.05*

Buckling resistance: (CTE DB SE-A, Article 6.3.2)

The design buckling resistance **$N_{b,Rd}$** of a compressed bar is given by:

$$N_{b,Rd} = \chi \cdot A \cdot f_{yd}$$

$N_{b,Rd}$: *1125.14* kN

Where:

A: Area of the gross section for class 1, 2 and 3 sections. **A** : *65.30* cm²

f_{yd}: Steel design strength. **f_{yd}** : *261.90* MPa

$$f_{yd} = f_y / \gamma_{M1}$$

Where:

f_y: Yield strength. (CTE DB SE-A, Table 4.1) **f_y** : *275.00* MPa

γ_{M1}: Partial safety factor of the material. **γ_{M1}** : *1.05*

χ: Reduction coefficient due to buckling.

χ_y : *0.89*

$$\chi = \frac{1}{\Phi + \sqrt{\Phi^2 - \left(\bar{\lambda}\right)^2}} \leq 1$$

χ_z : *0.66*

Where:

$$\Phi = 0.5 \cdot \left[1 + \alpha \cdot \left(\bar{\lambda} - 0.2\right) + \left(\bar{\lambda}\right)^2\right]$$

ϕ_y : *0.66*

ϕ_z : *0.97*

α: Elastic imperfection coefficient.

α_y : *0.34*

α_z : *0.49*

$\bar{\lambda}$: Reduced slenderness.

$$\bar{\lambda} = \sqrt{\frac{A \cdot f_y}{N_{cr}}}$$

$\bar{\lambda}_y$: *0.48*

$\bar{\lambda}_z$: *0.81*

N_{cr}: Critical elastic buckling axial force, obtained from the smallest of the following values:

N_{cr} : *2758.77* kN

$N_{cr,y}$: Critical elastic buckling axial force with respect to the Y axis.

$N_{cr,y}$: *7754.10* kN

$N_{cr,z}$: Critical elastic buckling axial force with respect to the Z axis.

$N_{cr,z}$: *2758.77* kN

$N_{cr,T}$: Critical elastic buckling axial force due to torsion.

$N_{cr,T}$: ∞

Y - Axis bending resistance (CTE DB SE-A, Article 6.2.6)

The following criteria must be satisfied:

$$\eta = \frac{M_{Ed}}{M_{c,Rd}} \leq 1$$

η : ***0.354*** ✓

For positive bending:

M_{Ed}^+: Worst case design bending moment.

M_{Ed}^+ : *0.00* kN·m

For negative bending:

The worst case design force occurs at a point situated at a distance of 3.065 m from node N16, for load combination 1.35·SW+1.5·Q1+0.9·V2.

M_{Ed}^-: Worst case design bending moment.

M_{Ed}^- : *44.67* kN·m

The design bending moment resistance **$M_{c,Rd}$** is given by:

$$M_{c,Rd} = W_{pl,y} \cdot f_{yd}$$

$M_{c,Rd}$: *126.08* kN·m

Where:

Class: Section class, depending on its deformation capacity and development of plastic resistance of the flat elements of a section submitted to simple bending.

Class : *1*

$W_{pl,y}$: Plastic strength modulus corresponding to the fibre with greatest tension, for class 1 and 2 sections.

$W_{pl,y}$: *481.40* cm³

f_{yd}: Steel design strength.

f_{yd} : *261.90* MPa

$f_{yd} = f_y / \gamma_{M0}$

Where:

f_y: Yield strength. (CTE DB SE-A, Table 4.1) — f_y : *275.00* MPa

γ_{M0}: Partial safety factor of the material. — γ_{M0} : *1.05*

Lateral buckling resistance: (CTE DB SE-A, Article 6.3.3.2)

Does not proceed, as the lateral buckling lengths are null.

Z - Axis bending resistance (CTE DB SE-A, Article 6.2.6)

The following criteria must be satisfied:

$$\eta = \frac{M_{Ed}}{M_{c,Rd}} \leq 1$$

η : ***0.390*** ✓

For positive bending:

The worst case design force occurs at a point situated at a distance of 3.065 m from node N16, for load combination 1.35·SW+1.05·Q1+1.5·V3+0.75·N1.

M_{Ed}^+: Worst case design bending moment. — M_{Ed}^+ : *23.59* kN·m

For negative bending:

The worst case design force occurs at a point situated at a distance of 3.065 m from node N16, for load combination 0.8·SW+1.5·V4.

M_{Ed}^-: Worst case design bending moment. — M_{Ed}^- : *8.52* kN·m

The design bending moment resistance $M_{c,Rd}$ is given by:

$$M_{c,Rd} = W_{pl,z} \cdot f_{yd}$$

$M_{c,Rd}$: *60.50* kN·m

Where:

Class: Section class, depending on its deformation capacity and development of plastic resistance of the flat elements of a section submitted to simple bending. — **Class** : *1*

$W_{pl,z}$: Plastic strength modulus corresponding to the fibre with greatest tension, for class 1 and 2 sections. — $W_{pl,z}$: *231.00* cm³

f_{yd}: Steel design strength. — f_{yd} : *261.90* MPa

$f_{yd} = f_y / \gamma_{M0}$

Where:

f_y: Yield strength. (CTE DB SE-A, Table 4.1) — f_y : *275.00* MPa

γ_{M0}: Partial safety factor of the material. — γ_{M0} : *1.05*

Resistance to shear in the Z direction (CTE DB SE-A, Article 6.2.4)

The following criteria must be satisfied:

$$\eta = \frac{V_{Ed}}{V_{c,Rd}} \leq 1$$

η : ***0.085*** ✓

The worst case design force occurs for load combination 1.35·SW+1.05·Q1+1.5·V2.

V_{Ed}: Worst case design shear force. **V_{Ed}** : *26.13* kN

The shear resistance **$V_{c,Rd}$** is given by:

$$V_{c,Rd} = A_V \cdot \frac{f_{yd}}{\sqrt{3}}$$

$V_{c,Rd}$: *306.81* kN

Where:

A_v: Transverse shear area. **A_v** : *20.29* cm²

$$A_V = h \cdot t_w$$

Where:

h: Depth of the section. **h** : *180.00* mm

t_w: Web thickness. **t_w** : *8.50* mm

f_{yd}: Steel design strength. **f_{yd}** : *261.90* MPa

$$f_{yd} = f_y / \gamma_{M0}$$

Where:

f_y: Yield strength. (CTE DB SE-A, Table 4.1) **f_y** : *275.00* MPa

γ_{M0}: Partial safety factor of the material. **γ_{M0}** : *1.05*

Shear buckling of the web: (CTE DB SE-A, Article 6.3.3.4)

Even though transverse stiffeners have not been provided, it is not necessary to check the buckling resistance of the web, as the following is verified:

$$\frac{d}{t_w} < 70 \cdot \varepsilon$$

14.35 < **64.71** ✓

Where:

λ_w: Slenderness of the web. **λ_w** : *14.35*

$$\lambda_w = \frac{d}{t_w}$$

λ_{max}: Maximum slenderness. **λ_{max}** : *64.71*

$$\lambda_{max} = 70 \cdot \varepsilon$$

ε: Reduction factor. **ε** : *0.92*

$$\varepsilon = \sqrt{\frac{f_{ref}}{f_y}}$$

Where:

f_{ref}: Reference elastic limit. — f_{ref} : *235.00* MPa

f_y: Yield strength. (CTE DB SE-A, Table 4.1) — f_y : *275.00* MPa

Resistance to shear in the Y direction (CTE DB SE-A, Article 6.2.4)

The following criteria must be satisfied:

$$\eta = \frac{V_{Ed}}{V_{c,Rd}} \leq 1$$

η : ***0.018*** ✓

The worst case design force occurs for load combination 1.35·SW+1.05·Q1+1.5·V3+0.75·N1.

V_{Ed}: Worst case design shear force. — V_{Ed} : *14.61* kN

The shear resistance $V_{c,Rd}$ is given by:

$$V_{c,Rd} = A_V \cdot \frac{f_{yd}}{\sqrt{3}}$$

$V_{c,Rd}$: *792.04* kN

Where:

A_v: Transverse shear area. — A_v : *52.38* cm²

$$A_V = A - d \cdot t_w$$

Where:

A: Area of the gross section. — A : *65.30* cm²

d: Height of the web. — d : *152.00* mm

t_w: Web thickness. — t_w : *8.50* mm

f_{yd}: Steel design strength. — f_{yd} : *261.90* MPa

$$f_{yd} = f_y / \gamma_{M0}$$

Where:

f_y: Yield strength. (CTE DB SE-A, Table 4.1) — f_y : *275.00* MPa

γ_{M0}: Partial safety factor of the material. — γ_{M0} : *1.05*

Combined bending moment Y and shear force Z resistance (CTE DB SE-A, Article 6.2.8)

It is not necessary to reduce the design bending resistance, as the worst case shear force V_{Ed} is not greater than 50% of the design shear resistance $V_{c,Rd}$.

$$V_{Ed} \leq \frac{V_{c,Rd}}{2}$$ **26.13 kN ≤ 153.40 kN** ✓

The worst case design forces occur for load combination 1.35·SW+1.05·Q1+1.5·V2.

V_{Ed}: Worst case design shear force. **V_{Ed}** : *26.13* kN

$V_{c,Rd}$: Design resistant shear force. **$V_{c,Rd}$** : *306.81* kN

Combined bending moment Z and shear force Y resistance (CTE DB SE-A, Article 6.2.8)

It is not necessary to reduce the design bending resistance, as the worst case shear force **V_{Ed}** is not greater than 50% of the design shear resistance **$V_{c,Rd}$**.

$$V_{Ed} \leq \frac{V_{c,Rd}}{2}$$ **14.61 kN ≤ 396.02 kN** ✓

The worst case design forces occur for load combination 1.35·SW+1.05·Q1+1.5·V3+0.75·N1.

V_{Ed}: Worst case design shear force. **V_{Ed}** : *14.61* kN

$V_{c,Rd}$: Design resistant shear force. **$V_{c,Rd}$** : *792.04* kN

Combined bending and axial resistance (CTE DB SE-A, Article 6.2.8)

The following criteria must be satisfied:

$$\eta = \frac{N_{c,Ed}}{N_{pl,Rd}} + \frac{M_{y,Ed}}{M_{pl,Rd,y}} + \frac{M_{z,Ed}}{M_{pl,Rd,z}} \leq 1$$ η : ***0.737*** ✓

$$\eta = \frac{N_{c,Ed}}{\chi_y \cdot A \cdot f_{yd}} + k_y \cdot \frac{c_{m,y} \cdot M_{y,Ed}}{\chi_{LT} \cdot W_{pl,y} \cdot f_{yd}} + \alpha_z \cdot k_z \cdot \frac{c_{m,z} \cdot M_{z,Ed}}{W_{pl,z} \cdot f_{yd}} \leq 1$$ η : ***0.633*** ✓

$$\eta = \frac{N_{c,Ed}}{\chi_z \cdot A \cdot f_{yd}} + \alpha_y \cdot k_y \cdot \frac{c_{m,y} \cdot M_{y,Ed}}{W_{pl,y} \cdot f_{yd}} + k_z \cdot \frac{c_{m,z} \cdot M_{z,Ed}}{W_{pl,z} \cdot f_{yd}} \leq 1$$ η : ***0.744*** ✓

The worst case design forces occur at a point situated at a distance of 3.065 m from node N16, for load combination 1.35·SW+1.05·Q1+1.5·V3+0.75·N1.

Where:

$N_{c,Ed}$: Worst case design compressive axial force.	$N_{c,Ed}$:	159.19	kN
$M_{y,Ed}$, $M_{z,Ed}$: Worst case bending moments, in accordance with the Y and Z axes, respectively.	$M_{y,Ed}^-$:	32.04	kN·m
	$M_{z,Ed}^+$:	23.59	kN·m
Class: Section class, according to its deformation capacity and plastic resistance development of its flat elements, for axial load and simple bending.	**Class** :	1	
$N_{pl,Rd}$: Compressive resistance of the gross section.	$N_{pl,Rd}$:	1710.24	kN
$M_{pl,Rd,y}$, $M_{pl,Rd,z}$: Bending resistance of the gross section in plastic conditions, with respect to the Y and Z axes, respectively.	$M_{pl,Rd,y}$:	126.08	kN·m
	$M_{pl,Rd,z}$:	60.50	kN·m

Buckling resistance: (CTE DB SE-A, Article 6.3.4.2)

A: Area of the gross section.	**A** :	65.30	cm²
$W_{pl,y}$, $W_{pl,z}$: Plastic resistant modules corresponding to the compressed fibre, about the Y and Z, respectively.	$W_{pl,y}$:	481.40	cm³
	$W_{pl,z}$:	231.00	cm³
f_{yd}: Steel design strength.	f_{yd} :	261.90	MPa

$$f_{yd} = f_y / \gamma_{M1}$$

Where:

f_y: Yield strength. (CTE DB SE-A, Table 4.1)	f_y :	275.00	MPa
γ_{M1}: Partial safety factor of the material.	γ_{M1} :	1.05	

k_y, k_z: Interaction coefficients.

$$k_y = 1 + \left(\bar{\lambda}_y - 0.2\right) \cdot \frac{N_{c,Ed}}{\chi_y \cdot N_{c,Rd}}$$

k_y : 1.03

$$k_z = 1 + \left(2 \cdot \bar{\lambda}_z - 0.6\right) \cdot \frac{N_{c,Ed}}{\chi_z \cdot N_{c,Rd}}$$

k_z : 1.14

$C_{m,y}$, $C_{m,z}$: Equivalent uniform bending moment factors.	$C_{m,y}$:	1.00
	$C_{m,z}$:	1.00
χ_y, χ_z: Buckling reduction coefficients, about the Y and Z axes, respectively.	χ_y :	0.89
	χ_z :	0.66
$\bar{\lambda}_y$, $\bar{\lambda}_z$: Reduced slenderness with values no greater than 1.00, with respect to the Y and Z axes, respectively.	$\bar{\lambda}_y$:	0.48
	$\bar{\lambda}_z$:	0.81
α_y, α_z: Factors that depend on the class of the section.	α_y :	0.60
	α_z :	0.60

Combined bending, axial and shear resistance (CTE DB SE-A, Article 6.2.8)

It is not necessary to reduce the design bending and axial force resistance, as the buckling effect can be ignored due to shear. Additionally, the worst case design shear force **V_{Ed}** is less than or equal to 50% of the design shear resistance **$V_{c,Rd}$**.

The worst case design forces occur for load combination 1.35·SW+1.05·Q1+1.5·V2.

$$V_{Ed,z} \leq \frac{V_{c,Rd,z}}{2}$$ **26.13 kN ≤ 153.24 kN** ✓

Where:

$V_{Ed,z}$: Worst case design shear force. — $V_{Ed,z}$: *26.13* kN

$V_{c,Rd,z}$: Design resistant shear force. — $V_{c,Rd,z}$: *306.49* kN

Torsional resistance (CTE DB SE-A, Article 6.2.7)

The following criteria must be satisfied:

$$\eta = \frac{M_{T,Ed}}{M_{T,Rd}} \leq 1$$ η : ***0.003*** ✓

The worst case design force occurs for load combination 1.35·SW+1.05·Q1+1.5·V2.

$M_{T,Ed}$: Worst case design torsional moment. — $M_{T,Ed}$: *0.01* kN·m

The design torsional moment resistance $M_{T,Rd}$ is given by:

$$M_{T,Rd} = \frac{1}{\sqrt{3}} \cdot W_T \cdot f_{yd}$$ $M_{T,Rd}$: *4.55* kN·m

Where:

W_T: Torsion resistance module. — W_T : *30.11* cm³

f_{yd}: Steel design strength. — f_{yd} : *261.90* MPa

$$f_{yd} = f_y / \gamma_{M0}$$

Where:

f_y: Yield strength. (CTE DB SE-A, Table 4.1) — f_y : *275.00* MPa

γ_{M0}: Partial safety factor of the material. — γ_{M0} : *1.05*

Combined Z shear and torsional resistance (CTE DB SE-A, Article 6.2.8)

The following criteria must be satisfied:

$$\eta = \frac{V_{Ed}}{V_{pl,T,Rd}} \leq 1$$ η : ***0.085*** ✓

The worst case design forces occur for load combination 1.35·SW+1.05·Q1+1.5·V2.

V_{Ed}: Worst case design shear force. **V_{Ed}** : *26.13* kN

$M_{T,Ed}$: Worst case design torsional moment. **$M_{T,Ed}$** : *0.01* kN·m

The reduced design resistant shear force **$V_{pl,T,Rd}$** is given by:

$$V_{pl,T,Rd} = \sqrt{1 - \frac{\tau_{T,Ed}}{1.25 \cdot f_{yd}/\sqrt{3}}} \cdot V_{pl,Rd}$$

$V_{pl,T,Rd}$: *306.49* kN

Where:

$V_{pl,Rd}$: Design resistant shear force. **$V_{pl,Rd}$** : *306.81* kN

$\tau_{T,Ed}$: Tangential stresses due to torsion. **$\tau_{T,Ed}$** : *0.39* MPa

$$\tau_{T,Ed} = \frac{M_{T,Ed}}{W_t}$$

Where:

W_T: Torsion resistance module. **W_T** : *30.11* cm³

f_{yd}: Steel design strength. **f_{yd}** : *261.90* MPa

$$f_{yd} = f_y / \gamma_{M0}$$

Where:

f_y: Yield strength. (CTE DB SE-A, Table 4.1) **f_y** : *275.00* MPa

γ_{M0}: Partial safety factor of the material. **γ_{M0}** : *1.05*

Combined Y shear and torsional resistance (CTE DB SE-A, Article 6.2.8)

The following criteria must be satisfied:

$$\eta = \frac{V_{Ed}}{V_{pl,T,Rd}} \leq 1$$

η : ***0.018*** ✓

The worst case design forces occur for load combination 1.35·SW+1.05·Q1+1.5·V3+0.75·N1.

V_{Ed}: Worst case design shear force. **V_{Ed}** : *14.61* kN

$M_{T,Ed}$: Worst case design torsional moment. **$M_{T,Ed}$** : *0.00* kN·m

The reduced design resistant shear force **$V_{pl,T,Rd}$** is given by:

$$V_{pl,T,Rd} = \sqrt{1 - \frac{\tau_{T,Ed}}{1.25 \cdot f_{yd}/\sqrt{3}}} \cdot V_{pl,Rd}$$

$V_{pl,T,Rd}$: *791.71* kN

Where:

$V_{pl,Rd}$: Design resistant shear force. **$V_{pl,Rd}$** : *792.04* kN

$\tau_{T,Ed}$: Tangential stresses due to torsion. **$\tau_{T,Ed}$** : *0.16* MPa

$$\tau_{T,Ed} = \frac{M_{T,Ed}}{W_t}$$

Where:

W_T: Torsion resistance module. **W_T** : *30.11* cm³

f_{yd}: Steel design strength. **f_{yd}** : *261.90* MPa

$\mathbf{f_{yd}} = f_y / \gamma_{M0}$

Where:

$\mathbf{f_y}$: Yield strength. (CTE DB SE-A, Table 4.1) $\mathbf{f_y}$: *275.00* MPa

γ_{M0}: Partial safety factor of the material. γ_{M0} : *1.05*

2.4 Section 4

Section: IPE 270
Material: Steel (S275)

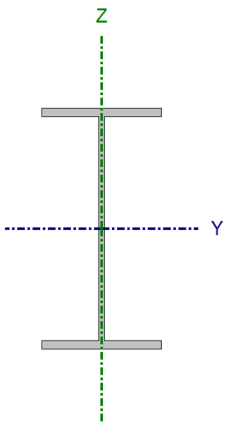

Nodes		Length (m)	Mechanical characteristics			
Initial	Final		Area (cm²)	I_y(1) (cm4)	I_z(1) (cm4)	I_t(2) (cm4)
N18	N20	1.000	45.90	5790.00	420.00	15.90

Notes:
(1) Inertia with respect to the indicated axis
(2) Uniform torsional moment of inertia

	Buckling		Lateral buckling	
	XY plane	XZ plane	Top fl.	Bot. fl.
β	0.50	1.00	0.00	0.00
L_K	0.500	1.000	0.000	0.000
C_m	1.000	1.000	1.000	1.000
C_1	-		1.000	

Notation:
β: Buckling coefficient
L_K: Buckling length (m)
C_m: Moment coefficient
C_1: Critical moment modification factor

Bar	CHECKS (CTE DB SE-A)															Status
	$\bar{\lambda}$	λ_w	N_t	N_c	M_Y	M_Z	V_Z	V_Y	M_YV_Z	M_ZV_Y	NM_YM_Z	$NM_YM_ZV_YV_Z$	M_t	M_tV_Z	M_tV_Y	
N18/N20	$\bar{\lambda}$ < 2.0 Verified	$\lambda_w \le \lambda_{w,max}$ Verified	η = 0.5	η = 1.0	x: 0.91 m η = 63.1	x: 0.91 m η = 8.0	x: 0.91 m η = 21.4	η = 0.6	η < 0.1	η < 0.1	x: 0.91 m η = 68.0	η < 0.1	η = 4.3	x: 0.91 m η = 21.8	η = 0.6	**VERIFIED η = 68.0**

Notation:
$\bar{\lambda}$: Slenderness limit
λ_w: Crushing of the web induced by the compressed flange
N_t: Resistance to axial tension
N_c: Compression resistance
M_Y: Y - Axis bending resistance
M_Z: Z - Axis bending resistance
V_Z: Resistance to shear in the Z direction
V_Y: Resistance to shear in the Y direction
M_YV_Z: Combined bending moment Y and shear force Z resistance
M_ZV_Y: Combined bending moment Z and shear force Y resistance
NM_YM_Z: Combined bending and axial resistance
$NM_YM_ZV_YV_Z$: Combined bending, axial and shear resistance
M_t: Torsional resistance
M_tV_Z: Combined Z shear and torsional resistance
M_tV_Y: Combined Y shear and torsional resistance
x: Distance to the origin of the bar
η: Usage coefficient (%)

Slenderness limit (CTE DB SE-A, Articles 6.3.1 and 6.3.2.1 - Table 6.3)

The reduced slenderness $\bar{\lambda}$ of the bars in compression must be less than 2.0.

$\bar{\lambda}$: ***0.19*** ✓

$$\bar{\lambda} = \sqrt{\frac{A \cdot f_y}{N_{cr}}}$$

Where:

Class: Section class, depending on its deformation capacity and development of plastic resistance of the compressed elements of a section. **Class** : *2*

A: Area of the gross section for class 1, 2 and 3 sections. **A** : *45.90* cm²

f_y: Yield strength. (CTE DB SE-A, Table 4.1) **f_y** : *275.00* MPa

N_{cr}: Critical elastic buckling axial force. **N_{cr}** : *34819.96* kN

The critical elastic buckling axial force **N_{cr}** is the smallest of the following values a), b) and c):

a) Critical elastic buckling axial force with respect to the Y axis. **$N_{cr,y}$** : *120004.52* kN

$$N_{cr,y} = \frac{\pi^2 \cdot E \cdot I_y}{L_{ky}^2}$$

b) Critical elastic buckling axial force with respect to the Z axis. **$N_{cr,z}$** : *34819.96* kN

$$N_{cr,z} = \frac{\pi^2 \cdot E \cdot I_z}{L_{kz}^2}$$

c) Critical elastic buckling axial force due to torsion. **$N_{cr,T}$** : *∞*

$$N_{cr,T} = \frac{1}{i_0^2} \cdot \left[G \cdot I_t + \frac{\pi^2 \cdot E \cdot I_w}{L_{kt}^2} \right]$$

Where:

I_y: Moment of inertia of the gross section, with respect to the Y-axis. **I_y** : *5790.00* cm4

I_z: Moment of inertia of the gross section, with respect to the Z-axis. **I_z** : *420.00* cm4

I_t: Uniform torsional moment of inertia. **I_t** : *15.90* cm4

I_w: Section warping constant. **I_w** : *70600.00* cm6

E: Modulus of Elasticity. **E** : *210000* MPa

G: Elastic modulus of steel. **G** : *81000* MPa

L_{ky}: Effective buckling length due to bending, with respect to the Y axis. **L_{ky}** : *1.000* m

L_{kz}: Effective buckling length due to bending, with respect to the Z axis. **L_{kz}** : *0.500* m

L_{kt}: Effective buckling length due to torsion. **L_{kt}** : *0.000* m

i_0: Polar radius of gyration of the gross section, with respect to the centre of torsion. **i_0** : *11.63* cm

$$i_0 = \left(i_y^2 + i_z^2 + y_0^2 + z_0^2\right)^{0.5}$$

Where:

i_y , i_z: Radii of gyration of the gross section, with respect to the main axes of inertia Y and Z. **i_y** : *11.23* cm

i_z : *3.02* cm

y_0 : *0.00* mm

y_0 , z_0: Coordinates of the torsional centre in the direction of the main axes Y and Z, respectively, relative to the centre of gravity of the section.

z_0 : *0.00* mm

Crushing of the web induced by the compressed flange (CYPE criteria, based on: Eurocode 3 EN 1993-1-5: 2006, Article 8)

The following criteria must be satisfied:

$$\frac{h_w}{t_w} \leq k \frac{E}{f_{yf}} \sqrt{\frac{A_w}{A_{fc,ef}}}$$

37.82 ≤ 250.57 ✓

Where:

h_w: Height of the web. — **h_w** : *249.60* mm

t_w: Web thickness. — **t_w** : *6.60* mm

A_w: Area of the web. — **A_w** : *16.47* cm²

$A_{fc,ef}$: Reduced area of the compressed flange. — **$A_{fc,ef}$** : *13.77* cm²

k: Coefficient which depends on the class of the section. — **k** : *0.30*

E: Modulus of Elasticity. — **E** : *210000* MPa

f_{yf}: Steel elastic limit of the compressed flange. — **f_{yf}** : *275.00* MPa

Where:

$$f_{yf} = f_y$$

Resistance to axial tension (CTE DB SE-A, Article 6.2.3)

The following criteria must be satisfied:

$$\eta = \frac{N_{t,Ed}}{N_{t,Rd}} \leq 1$$

η : ***0.005*** ✓

The worst case design force occurs for load combination 0.8·SW+1.5·V1+0.75·N1.

$N_{t,Ed}$: Worst case design axial tensile force. — **$N_{t,Ed}$** : *6.32* kN

The design tensile resistance **$N_{t,Rd}$** is given by:

$$N_{t,Rd} = A \cdot f_{yd}$$

$N_{t,Rd}$: *1202.14* kN

Where:

A: Gross transverse section of the bar. — **A** : *45.90* cm²

f_{yd}: Steel design strength. — **f_{yd}** : *261.90* MPa

$f_{yd} = f_y / \gamma_{M0}$

Where:

f_y: Yield strength. (CTE DB SE-A, Table 4.1) — **f_y** : *275.00* MPa

γ_{M0}: Partial safety factor of the material. — **γ_{M0}** : *1.05*

Compression resistance (CTE DB SE-A, Article 6.2.5)

The following criteria must be satisfied:

$$\eta = \frac{N_{c,Ed}}{N_{c,Rd}} \leq 1$$

η : ***0.010*** ✓

The worst case design force occurs for load combination 1.35·SW+1.05·Q1+1.5·V2.

$N_{c,Ed}$: Worst case design compressive axial force. — **$N_{c,Ed}$** : *11.92* kN

The normal design compression force **$N_{c,Rd}$** should be taken as:

$$N_{c,Rd} = A \cdot f_{yd}$$

$N_{c,Rd}$: *1202.14* kN

Where:

Class: Section class, depending on its deformation capacity and development of plastic resistance of the compressed elements of a section. — **Class** : *2*

A: Area of the gross section for class 1, 2 and 3 sections. — **A** : *45.90* cm²

f_{yd}: Steel design strength. — **f_{yd}** : *261.90* MPa

$f_{yd} = f_y / \gamma_{M0}$

Where:

f_y: Yield strength. (CTE DB SE-A, Table 4.1) — **f_y** : *275.00* MPa

γ_{M0}: Partial safety factor of the material. — **γ_{M0}** : *1.05*

Buckling resistance: (CTE DB SE-A, Article 6.3.2)

For slenderness $\bar{\lambda} \leq 0.2$ the buckling check can be omitted, and only check the resistance of the transverse section.

$\bar{\lambda}$: Reduced slenderness. — $\bar{\lambda}$: *0.19*

$$\bar{\lambda} = \sqrt{\frac{A \cdot f_y}{N_{cr}}}$$

Where:

A: Area of the gross section for class 1, 2 and 3 sections. — **A** : *45.90* cm²

f_y: Yield strength. (CTE DB SE-A, Table 4.1) — **f_y** : *275.00* MPa

N_{cr}: Critical elastic buckling axial force, obtained from the smallest of the following values: — **N_{cr}** : *34819.96* kN

$N_{cr,y}$: Critical elastic buckling axial force with respect to the Y axis. — **$N_{cr,y}$** : *120004.52* kN

$N_{cr,z}$: Critical elastic buckling axial force with respect to the Z axis. — **$N_{cr,z}$** : *34819.96* kN

$N_{cr,T}$: Critical elastic buckling axial force due to torsion. — **$N_{cr,T}$** : ∞

Y - Axis bending resistance (CTE DB SE-A, Article 6.2.6)

The following criteria must be satisfied:

$$\eta = \frac{M_{Ed}}{M_{c,Rd}} \leq 1$$

η : ***0.631*** ✓

For positive bending:

M_{Ed}^+: Worst case design bending moment. — **M_{Ed}^+** : *0.00* kN·m

For negative bending:

The worst case design force occurs at a point situated at a distance of 0.910 m from node N18, for load combination 1.35·SW+1.5·Q1+0.9·V2+0.75·N1.

M_{Ed}^-: Worst case design bending moment. — **M_{Ed}^-** : *79.96* kN·m

The design bending moment resistance **$M_{c,Rd}$** is given by:

$$M_{c,Rd} = W_{pl,y} \cdot f_{yd}$$

$M_{c,Rd}$: *126.76* kN·m

Where:

Class: Section class, depending on its deformation capacity and development of plastic resistance of the flat elements of a section submitted to simple bending. — **Class** : *1*

$W_{pl,y}$: Plastic strength modulus corresponding to the fibre with greatest tension, for class 1 and 2 sections. — **$W_{pl,y}$** : *484.00* cm³

f_{yd}: Steel design strength. — **f_{yd}** : *261.90* MPa

$$f_{yd} = f_y / \gamma_{M0}$$

Where:

f_y: Yield strength. (CTE DB SE-A, Table 4.1) — **f_y** : *275.00* MPa

γ_{M0}: Partial safety factor of the material. — **γ_{M0}** : *1.05*

Lateral buckling resistance: (CTE DB SE-A, Article 6.3.3.2)

Does not proceed, as the lateral buckling lengths are null.

Z - Axis bending resistance (CTE DB SE-A, Article 6.2.6)

The following criteria must be satisfied:

$$\eta = \frac{M_{Ed}}{M_{c,Rd}} \leq 1$$

η : ***0.080*** ✓

For positive bending:

The worst case design force occurs at a point situated at a distance of 0.910 m from node N18, for load combination 1.35·SW+1.05·Q1+1.5·V3.

M_{Ed}^+: Worst case design bending moment. **M_{Ed}^+** : *2.02* kN·m

For negative bending:

The worst case design force occurs at a point situated at a distance of 0.910 m from node N18, for load combination 0.8·SW+1.5·V4+0.75·N1.

M_{Ed}^-: Worst case design bending moment. **M_{Ed}^-** : *1.27* kN·m

The design bending moment resistance **$M_{c,Rd}$** is given by:

$$M_{c,Rd} = W_{pl,z} \cdot f_{yd}$$

$M_{c,Rd}$: *25.40* kN·m

Where:

Class: Section class, depending on its deformation capacity and development of plastic resistance of the flat elements of a section submitted to simple bending. **Class** : *1*

$W_{pl,z}$: Plastic strength modulus corresponding to the fibre with greatest tension, for class 1 and 2 sections. **$W_{pl,z}$** : *97.00* cm³

f_{yd}: Steel design strength. **f_{yd}** : *261.90* MPa

$$f_{yd} = f_y / \gamma_{M0}$$

Where:

f_y: Yield strength. (CTE DB SE-A, Table 4.1) **f_y** : *275.00* MPa

γ_{M0}: Partial safety factor of the material. **γ_{M0}** : *1.05*

Resistance to shear in the Z direction (CTE DB SE-A, Article 6.2.4)

The following criteria must be satisfied:

$$\eta = \frac{V_{Ed}}{V_{c,Rd}} \leq 1$$

η : ***0.214*** ✓

The worst case design force occurs at a point situated at a distance of 0.910 m from node N18, for load combination 1.35·SW+1.5·Q1+0.9·V2+0.75·N1.

V_{Ed}: Worst case design shear force. **V_{Ed}** : *71.57* kN

The shear resistance **$V_{c,Rd}$** is given by:

$$V_{c,Rd} = A_V \cdot \frac{f_{yd}}{\sqrt{3}}$$

$V_{c,Rd}$: *334.07* kN

Where:

A_v: Transverse shear area. **A_v** : *22.09* cm²

$$A_V = h \cdot t_w$$

Where:

h: Depth of the section. **h** : *270.00* mm

t_w: Web thickness. **t_w** : *6.60* mm

f_{yd}: Steel design strength. **f_{yd}** : *261.90* MPa

$$f_{yd} = f_y / \gamma_{M0}$$

Where:

f_y: Yield strength. (CTE DB SE-A, Table 4.1) **f_y** : *275.00* MPa

γ_{M0}: Partial safety factor of the material. **γ_{M0}** : *1.05*

Shear buckling of the web: (CTE DB SE-A, Article 6.3.3.4)

Even though transverse stiffeners have not been provided, it is not necessary to check the buckling resistance of the web, as the following is verified:

$$\frac{d}{t_w} < 70 \cdot \varepsilon$$

33.27 < **64.71** ✓

Where:

λ_w: Slenderness of the web. **λ_w** : *33.27*

$$\lambda_w = \frac{d}{t_w}$$

λ_{max}: Maximum slenderness. **λ_{max}** : *64.71*

$$\lambda_{max} = 70 \cdot \varepsilon$$

ε: Reduction factor. **ε** : *0.92*

$$\varepsilon = \sqrt{\frac{f_{ref}}{f_y}}$$

Where:

f_{ref}: Reference elastic limit. **f_{ref}** : *235.00* MPa

f_y: Yield strength. (CTE DB SE-A, Table 4.1) **f_y** : *275.00* MPa

Resistance to shear in the Y direction (CTE DB SE-A, Article 6.2.4)

The following criteria must be satisfied:

$$\eta = \frac{V_{Ed}}{V_{c,Rd}} \leq 1$$

η : ***0.006*** ✓

The worst case design force occurs for load combination 1.35·SW+1.05·Q1+1.5·V3.

V_{Ed}: Worst case design shear force. **V_{Ed}** : *2.70* kN

The shear resistance **$V_{c,Rd}$** is given by:

$$V_{c,Rd} = A_V \cdot \frac{f_{yd}}{\sqrt{3}}$$

$V_{c,Rd}$: *444.96* kN

Where:

A_v: Transverse shear area. **A_v** : *29.43* cm²

$$A_V = A - d \cdot t_w$$

Where:

A: Area of the gross section. **A** : *45.90* cm²

d: Height of the web. **d** : *249.60* mm

t_w: Web thickness. **t_w** : *6.60* mm

f_{yd}: Steel design strength. **f_{yd}** : *261.90* MPa

$$f_{yd} = f_y / \gamma_{M0}$$

Where:

f_y: Yield strength. (CTE DB SE-A, Table 4.1) **f_y** : *275.00* MPa

γ_{M0}: Partial safety factor of the material. **γ_{M0}** : *1.05*

Combined bending moment Y and shear force Z resistance (CTE DB SE-A, Article 6.2.8)

It is not necessary to reduce the design bending resistance, as the worst case shear force **V_{Ed}** is not greater than 50% of the design shear resistance **$V_{c,Rd}$**.

$$V_{Ed} \leq \frac{V_{c,Rd}}{2}$$

71.14 kN ≤ 167.04 kN ✓

The worst case design forces occur for load combination 1.35·SW+1.5·Q1+0.9·V2+0.75·N1.

V_{Ed}: Worst case design shear force. **V_{Ed}** : *71.14* kN

$V_{c,Rd}$: Design resistant shear force. **$V_{c,Rd}$** : *334.07* kN

Combined bending moment Z and shear force Y resistance (CTE DB SE-A, Article 6.2.8)

It is not necessary to reduce the design bending resistance, as the worst case shear force $\mathbf{V_{Ed}}$ is not greater than 50% of the design shear resistance $\mathbf{V_{c,Rd}}$.

$$V_{Ed} \leq \frac{V_{c,Rd}}{2}$$

2.70 kN ≤ 222.48 kN ✓

The worst case design forces occur for load combination 1.35·SW+1.05·Q1+1.5·V3.

$\mathbf{V_{Ed}}$: Worst case design shear force. — $\mathbf{V_{Ed}}$: *2.70* kN

$\mathbf{V_{c,Rd}}$: Design resistant shear force. — $\mathbf{V_{c,Rd}}$: *444.96* kN

Combined bending and axial resistance (CTE DB SE-A, Article 6.2.8)

The following criteria must be satisfied:

$$\eta = \frac{N_{c,Ed}}{N_{pl,Rd}} + \frac{M_{y,Ed}}{M_{pl,Rd,y}} + \frac{M_{z,Ed}}{M_{pl,Rd,z}} \leq 1$$

η : ***0.680*** ✓

$$\eta = \frac{N_{c,Ed}}{\chi_y \cdot A \cdot f_{yd}} + k_y \cdot \frac{c_{m,y} \cdot M_{y,Ed}}{\chi_{LT} \cdot W_{pl,y} \cdot f_{yd}} + \alpha_z \cdot k_z \cdot \frac{c_{m,z} \cdot M_{z,Ed}}{W_{pl,z} \cdot f_{yd}} \leq 1$$

η : ***0.662*** ✓

$$\eta = \frac{N_{c,Ed}}{\chi_z \cdot A \cdot f_{yd}} + \alpha_y \cdot k_y \cdot \frac{c_{m,y} \cdot M_{y,Ed}}{W_{pl,y} \cdot f_{yd}} + k_z \cdot \frac{c_{m,z} \cdot M_{z,Ed}}{W_{pl,z} \cdot f_{yd}} \leq 1$$

η : ***0.430*** ✓

The worst case design forces occur at a point situated at a distance of 0.910 m from node N18, for load combination 1.35·SW+1.5·Q1+0.9·V2.

Where:

$\mathbf{N_{c,Ed}}$: Worst case design compressive axial force. — $\mathbf{N_{c,Ed}}$: *8.85* kN

$\mathbf{M_{y,Ed}}$, $\mathbf{M_{z,Ed}}$: Worst case bending moments, in accordance with the Y and Z axes, respectively. — $\mathbf{M_{y,Ed}^-}$: *79.32* kN·m; $\mathbf{M_{z,Ed}^+}$: *1.20* kN·m

Class: Section class, according to its deformation capacity and plastic resistance development of its flat elements, for axial load and simple bending. — **Class** : *1*

$\mathbf{N_{pl,Rd}}$: Compressive resistance of the gross section. — $\mathbf{N_{pl,Rd}}$: *1202.14* kN

$\mathbf{M_{pl,Rd,y}}$, $\mathbf{M_{pl,Rd,z}}$: Bending resistance of the gross section in plastic conditions, with respect to the Y and Z axes, respectively. — $\mathbf{M_{pl,Rd,y}}$: *126.76* kN·m; $\mathbf{M_{pl,Rd,z}}$: *25.40* kN·m

Buckling resistance: (CTE DB SE-A, Article 6.3.4.2)

A: Area of the gross section. — **A** : *45.90* cm²

$\mathbf{W_{pl,y}}$, $\mathbf{W_{pl,z}}$: Plastic resistant modules corresponding to the compressed fibre, about the Y and Z, respectively. — $\mathbf{W_{pl,y}}$: *484.00* cm³; $\mathbf{W_{pl,z}}$: *97.00* cm³

$\mathbf{f_{yd}}$: Steel design strength. — $\mathbf{f_{yd}}$: *261.90* MPa

$$\mathbf{f_{yd}} = f_y / \gamma_{M1}$$

Where:

$\mathbf{f_y}$: Yield strength. (CTE DB SE-A, Table 4.1) — $\mathbf{f_y}$: *275.00* MPa

γ_{M1}: Partial safety factor of the material. — γ_{M1} : *1.05*

$\mathbf{k_y}$, $\mathbf{k_z}$: Interaction coefficients.

$$\mathbf{k_y} = 1 + \left(\bar{\lambda}_y - 0.2\right) \cdot \frac{N_{c,Ed}}{\chi_y \cdot N_{c,Rd}}$$

$\mathbf{k_y}$: *1.00*

$$\mathbf{k_z} = 1 + \left(2 \cdot \bar{\lambda}_z - 0.6\right) \cdot \frac{N_{c,Ed}}{\chi_z \cdot N_{c,Rd}}$$

$\mathbf{k_z}$: *1.00*

$\mathbf{C_{m,y}}$, $\mathbf{C_{m,z}}$: Equivalent uniform bending moment factors. — $\mathbf{C_{m,y}}$: *1.00*; $\mathbf{C_{m,z}}$: *1.00*

χ_y, χ_z: Buckling reduction coefficients, about the Y and Z axes, respectively. — χ_y : *1.00*; χ_z : *1.00*

$\bar{\lambda}_y$, $\bar{\lambda}_z$: Reduced slenderness with values no greater than 1.00, with respect to the Y and Z axes, respectively. — $\bar{\lambda}_y$: *0.10*; $\bar{\lambda}_z$: *0.19*

α_y, α_z: Factors that depend on the class of the section. — α_y : *0.60*; α_z : *0.60*

Combined bending, axial and shear resistance (CTE DB SE-A, Article 6.2.8)

It is not necessary to reduce the design bending and axial force resistance, as the buckling effect can be ignored due to shear. Additionally, the worst case design shear force $\mathbf{V_{Ed}}$ is less than or equal to 50% of the design shear resistance $\mathbf{V_{c,Rd}}$.

The worst case design forces occur for load combination 1.35·SW+1.5·Q1+0.9·V2+0.75·N1.

$$\mathbf{V_{Ed,z}} \leq \frac{V_{c,Rd,z}}{2}$$

71.14 kN ≤ 164.31 kN ✓

Where:

$\mathbf{V_{Ed,z}}$: Worst case design shear force. — $\mathbf{V_{Ed,z}}$: *71.14* kN

$\mathbf{V_{c,Rd,z}}$: Design resistant shear force. — $\mathbf{V_{c,Rd,z}}$: *328.63* kN

Torsional resistance (CTE DB SE-A, Article 6.2.7)

The following criteria must be satisfied:

$$\eta = \frac{M_{T,Ed}}{M_{T,Rd}} \leq 1$$

η : ***0.043*** ✓

The worst case design force occurs for load combination 1.35·SW+1.5·Q1+0.9·V4+0.75·N1.

$M_{T,Ed}$: Worst case design torsional moment. **$M_{T,Ed}$** : *0.10* kN·m

The design torsional moment resistance **$M_{T,Rd}$** is given by:

$$M_{T,Rd} = \frac{1}{\sqrt{3}} \cdot W_T \cdot f_{yd}$$

$M_{T,Rd}$: *2.36* kN·m

Where:

W_T: Torsion resistance module. **W_T** : *15.59* cm³

f_{yd}: Steel design strength. **f_{yd}** : *261.90* MPa

$$f_{yd} = f_y / \gamma_{M0}$$

Where:

f_y: Yield strength. (CTE DB SE-A, Table 4.1) **f_y** : *275.00* MPa

γ_{M0}: Partial safety factor of the material. **γ_{M0}** : *1.05*

Combined Z shear and torsional resistance (CTE DB SE-A, Article 6.2.8)

The following criteria must be satisfied:

$$\eta = \frac{V_{Ed}}{V_{pl,T,Rd}} \leq 1$$

η : ***0.218*** ✓

The worst case design forces occur at a point situated at a distance of 0.910 m from node N18, for load combination 1.35·SW+1.5·Q1+0.9·V2+0.75·N1.

V_{Ed}: Worst case design shear force. **V_{Ed}** : *71.57* kN

$M_{T,Ed}$: Worst case design torsional moment. **$M_{T,Ed}$** : *0.10* kN·m

The reduced design resistant shear force **$V_{pl,T,Rd}$** is given by:

$$V_{pl,T,Rd} = \sqrt{1 - \frac{\tau_{T,Ed}}{1.25 \cdot f_{yd}/\sqrt{3}}} \cdot V_{pl,Rd}$$

$V_{pl,T,Rd}$: *328.63* kN

Where:

$V_{pl,Rd}$: Design resistant shear force. **$V_{pl,Rd}$** : *334.07* kN

$\tau_{T,Ed}$: Tangential stresses due to torsion. **$\tau_{T,Ed}$** : *6.11* MPa

$$\tau_{T,Ed} = \frac{M_{T,Ed}}{W_t}$$

Where:

W_T: Torsion resistance module. **W_T** : *15.59* cm³

f_{yd}: Steel design strength. **f_{yd}** : *261.90* MPa

$$f_{yd} = f_y / \gamma_{M0}$$

Where:

f_y: Yield strength. (CTE DB SE-A, Table 4.1) **f_y** : *275.00* MPa

γ_{M0}: Partial safety factor of the material. **γ_{M0}** : *1.05*

Combined Y shear and torsional resistance (CTE DB SE-A, Article 6.2.8)

The following criteria must be satisfied:

$$\eta = \frac{V_{Ed}}{V_{pl,T,Rd}} \leq 1$$

η : ***0.006*** ✓

The worst case design forces occur for load combination 1.35·SW+1.05·Q1+1.5·V3.

V_{Ed}: Worst case design shear force. **V_{Ed}** : *2.70* kN

$M_{T,Ed}$: Worst case design torsional moment. **$M_{T,Ed}$** : *0.06* kN·m

The reduced design resistant shear force **$V_{pl,T,Rd}$** is given by:

$$V_{pl,T,Rd} = \sqrt{1 - \frac{\tau_{T,Ed}}{1.25 \cdot f_{yd}/\sqrt{3}}} \cdot V_{pl,Rd}$$

$V_{pl,T,Rd}$: *440.13* kN

Where:

$V_{pl,Rd}$: Design resistant shear force. **$V_{pl,Rd}$** : *444.96* kN

$\tau_{T,Ed}$: Tangential stresses due to torsion. **$\tau_{T,Ed}$** : *4.08* MPa

$$\tau_{T,Ed} = \frac{M_{T,Ed}}{W_t}$$

Where:

W_T: Torsion resistance module. **W_T** : *15.59* cm³

f_{yd}: Steel design strength. **f_{yd}** : *261.90* MPa

$$f_{yd} = f_y / \gamma_{M0}$$

Where:

f_y: Yield strength. (CTE DB SE-A, Table 4.1) **f_y** : *275.00* MPa

γ_{M0}: Partial safety factor of the material. **γ_{M0}** : *1.05*

2.5 Section 5

Section: IPE 140
Material: Steel (S275)

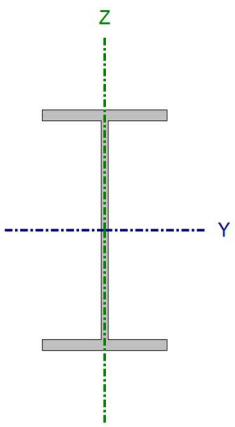

Nodes		Length (m)	Mechanical characteristics			
Initial	Final		Area (cm²)	I_y(1) (cm4)	I_z(1) (cm4)	I_t(2) (cm4)
N69	N73	1.900	16.40	541.00	44.90	2.45

Notes:
(1) Inertia with respect to the indicated axis
(2) Uniform torsional moment of inertia

	Buckling		Lateral buckling	
	XY plane	XZ plane	Top fl.	Bot. fl.
β	0.50	1.00	0.00	0.00
L_K	0.950	1.900	0.000	0.000
C_m	1.000	1.000	1.000	1.000
C_1	-		1.000	

Notation:
β: Buckling coefficient
L_K: Buckling length (m)
C_m: Moment coefficient
C_1: Critical moment modification factor

Bar	CHECKS (CTE DB SE-A)															Status
	$\bar{\lambda}$	λ_w	N_t	N_c	M_Y	M_Z	V_Z	V_Y	M_YV_Z	M_ZV_Y	NM_YM_Z	$NM_YM_ZV_YV_Z$	M_t	M_tV_Z	M_tV_Y	
N69/N73	$\bar{\lambda}$ < 2.0 Verified	$\lambda_w \le \lambda_{w,max}$ Verified	N_{Ed} = 0.00 D.N.P.(1)	η = 2.6	x: 1.9 m η = 32.7	x: 1.9 m η = 4.4	x: 0 m η = 1.1	η = 0.1	η < 0.1	η < 0.1	x: 1.9 m η = 38.0	η < 0.1	η = 0.4	x: 0 m η = 0.9	η = 0.1	**VERIFIED η = 38.0**

Notation:
$\bar{\lambda}$: Slenderness limit
λ_w: Crushing of the web induced by the compressed flange
N_t: Resistance to axial tension
N_c: Compression resistance
M_Y: Y - Axis bending resistance
M_Z: Z - Axis bending resistance
V_Z: Resistance to shear in the Z direction
V_Y: Resistance to shear in the Y direction
M_YV_Z: Combined bending moment Y and shear force Z resistance
M_ZV_Y: Combined bending moment Z and shear force Y resistance
NM_YM_Z: Combined bending and axial resistance
$NM_YM_ZV_YV_Z$: Combined bending, axial and shear resistance
M_t: Torsional resistance
M_tV_Z: Combined Z shear and torsional resistance
M_tV_Y: Combined Y shear and torsional resistance
x: Distance to the origin of the bar
η: Usage coefficient (%)
D.N.P.: Not applicable

Checks that do not proceed (D.N.P.):
(1) The check does not proceed, as there is no tensile axial force.

Slenderness limit (CTE DB SE-A, Articles 6.3.1 and 6.3.2.1 - Table 6.3)

The reduced slenderness $\bar{\lambda}$ of the bars in compression must be less than 2.0.

$$\bar{\lambda} = \sqrt{\frac{A \cdot f_y}{N_{cr}}}$$

$\bar{\lambda}$: ***0.66*** ✓

Where:

Class: Section class, depending on its deformation capacity and development of plastic resistance of the compressed elements of a section. **Class** : *1*

A: Area of the gross section for class 1, 2 and 3 sections. **A** : *16.40* cm²

f_y: Yield strength. (CTE DB SE-A, Table 4.1) **f_y** : *275.00* MPa

N_{cr}: Critical elastic buckling axial force. **N_{cr}** : *1031.14* kN

The critical elastic buckling axial force $\mathbf{N_{cr}}$ is the smallest of the following values a), b) and c):

a) Critical elastic buckling axial force with respect to the Y axis. $\mathbf{N_{cr,y}}$: *3106.05* kN

$$\mathbf{N_{cr,y}} = \frac{\pi^2 \cdot E \cdot I_y}{L_{ky}^2}$$

b) Critical elastic buckling axial force with respect to the Z axis. $\mathbf{N_{cr,z}}$: *1031.14* kN

$$\mathbf{N_{cr,z}} = \frac{\pi^2 \cdot E \cdot I_z}{L_{kz}^2}$$

c) Critical elastic buckling axial force due to torsion. $\mathbf{N_{cr,T}}$: ∞

$$\mathbf{N_{cr,T}} = \frac{1}{i_0^2} \cdot \left[G \cdot I_t + \frac{\pi^2 \cdot E \cdot I_w}{L_{kt}^2} \right]$$

Where:

$\mathbf{I_y}$: Moment of inertia of the gross section, with respect to the Y-axis. $\mathbf{I_y}$: *541.00* cm4

$\mathbf{I_z}$: Moment of inertia of the gross section, with respect to the Z-axis. $\mathbf{I_z}$: *44.90* cm4

$\mathbf{I_t}$: Uniform torsional moment of inertia. $\mathbf{I_t}$: *2.45* cm4

$\mathbf{I_w}$: Section warping constant. $\mathbf{I_w}$: *1980.00* cm6

E: Modulus of Elasticity. **E** : *210000* MPa

G: Elastic modulus of steel. **G** : *81000* MPa

$\mathbf{L_{ky}}$: Effective buckling length due to bending, with respect to the Y axis. $\mathbf{L_{ky}}$: *1.900* m

$\mathbf{L_{kz}}$: Effective buckling length due to bending, with respect to the Z axis. $\mathbf{L_{kz}}$: *0.950* m

$\mathbf{L_{kt}}$: Effective buckling length due to torsion. $\mathbf{L_{kt}}$: *0.000* m

$\mathbf{i_0}$: Polar radius of gyration of the gross section, with respect to the centre of torsion. $\mathbf{i_0}$: *5.98* cm

$$\mathbf{i_0} = \left(i_y^2 + i_z^2 + y_0^2 + z_0^2 \right)^{0.5}$$

Where:

$\mathbf{i_y}$, $\mathbf{i_z}$: Radii of gyration of the gross section, with respect to the main axes of inertia Y and Z. $\mathbf{i_y}$: *5.74* cm; $\mathbf{i_z}$: *1.65* cm

$\mathbf{y_0}$, $\mathbf{z_0}$: Coordinates of the torsional centre in the direction of the main axes Y and Z, respectively, relative to the centre of gravity of the section. $\mathbf{y_0}$: *0.00* mm; $\mathbf{z_0}$: *0.00* mm

<u>Crushing of the web induced by the compressed flange</u> (CYPE criteria, based on: Eurocode 3 EN 1993-1-5: 2006, Article 8)

The following criteria must be satisfied:

26.85 ≤ 248.60 ✓

$$\frac{h_w}{t_w} \leq k \frac{E}{f_{yf}} \sqrt{\frac{A_w}{A_{fc,ef}}}$$

Where:

h_w: Height of the web.	**h_w** :	*126.20*	mm
t_w: Web thickness.	**t_w** :	*4.70*	mm
A_w: Area of the web.	**A_w** :	*5.93*	cm²
$A_{fc,ef}$: Reduced area of the compressed flange.	**$A_{fc,ef}$** :	*5.04*	cm²
k: Coefficient which depends on the class of the section.	**k** :	*0.30*	
E: Modulus of Elasticity.	**E** :	*210000*	MPa
f_{yf}: Steel elastic limit of the compressed flange.	**f_{yf}** :	*275.00*	MPa

Where:

$$f_{yf} = f_y$$

Resistance to axial tension (CTE DB SE-A, Article 6.2.3)

The check does not proceed, as there is no tensile axial force.

Compression resistance (CTE DB SE-A, Article 6.2.5)

The following criteria must be satisfied:

$$\eta = \frac{N_{c,Ed}}{N_{c,Rd}} \leq 1$$

η : ***0.021*** ✓

$$\eta = \frac{N_{c,Ed}}{N_{b,Rd}} \leq 1$$

η : ***0.026*** ✓

The worst case design force occurs for load combination 1.35·SW+1.05·Q1+1.5·V2+0.75·N1.

$N_{c,Ed}$: Worst case design compressive axial force. **$N_{c,Ed}$** : *9.02* kN

The normal design compression force **$N_{c,Rd}$** should be taken as:

$$N_{c,Rd} = A \cdot f_{yd}$$

$N_{c,Rd}$: *429.52* kN

Where:

Class: Section class, depending on its deformation capacity and development of plastic resistance of the compressed elements of a section.	**Class** :	*1*	
A: Area of the gross section for class 1, 2 and 3 sections.	**A** :	*16.40*	cm²
f_{yd}: Steel design strength.	**f_{yd}** :	*261.90*	MPa

$$f_{yd} = f_y / \gamma_{M0}$$

Where:

f_y: Yield strength. (CTE DB SE-A, Table 4.1) — f_y : 275.00 MPa

γ_{M0}: Partial safety factor of the material. — γ_{M0} : 1.05

Buckling resistance: (CTE DB SE-A, Article 6.3.2)

The design buckling resistance $N_{b,Rd}$ of a compressed bar is given by:

$$N_{b,Rd} = \chi \cdot A \cdot f_{yd}$$

$N_{b,Rd}$: 345.80 kN

Where:

A: Area of the gross section for class 1, 2 and 3 sections. — A : 16.40 cm²

f_{yd}: Steel design strength. — f_{yd} : 261.90 MPa

$$f_{yd} = f_y / \gamma_{M1}$$

Where:

f_y: Yield strength. (CTE DB SE-A, Table 4.1) — f_y : 275.00 MPa

γ_{M1}: Partial safety factor of the material. — γ_{M1} : 1.05

χ: Reduction coefficient due to buckling.

$$\chi = \frac{1}{\Phi + \sqrt{\Phi^2 - \left(\bar{\lambda}\right)^2}} \leq 1$$

χ_y : 0.96

χ_z : 0.81

Where:

$$\Phi = 0.5 \cdot \left[1 + \alpha \cdot \left(\bar{\lambda} - 0.2\right) + \left(\bar{\lambda}\right)^2\right]$$

ϕ_y : 0.59

ϕ_z : 0.80

α: Elastic imperfection coefficient.

α_y : 0.21

α_z : 0.34

$\bar{\lambda}$: Reduced slenderness.

$$\bar{\lambda} = \sqrt{\frac{A \cdot f_y}{N_{cr}}}$$

$\bar{\lambda}_y$: 0.38

$\bar{\lambda}_z$: 0.66

N_{cr}: Critical elastic buckling axial force, obtained from the smallest of the following values: — N_{cr} : 1031.14 kN

$N_{cr,y}$: Critical elastic buckling axial force with respect to the Y axis. — $N_{cr,y}$: 3106.05 kN

$N_{cr,z}$: Critical elastic buckling axial force with respect to the Z axis. — $N_{cr,z}$: 1031.14 kN

$N_{cr,T}$: Critical elastic buckling axial force due to torsion. — $N_{cr,T}$: ∞

Y - Axis bending resistance (CTE DB SE-A, Article 6.2.6)

The following criteria must be satisfied:

$$\eta = \frac{M_{Ed}}{M_{c,Rd}} \leq 1$$

η : ***0.327*** ✓

For positive bending:

The worst case design force occurs at node N73, for load combination 1.35·SW+0.9·V3+1.5·N1.

M_{Ed}^{+}: Worst case design bending moment. **M_{Ed}^{+}** : *7.55* kN·m

For negative bending:

M_{Ed}^{-}: Worst case design bending moment. **M_{Ed}^{-}** : *0.00* kN·m

The design bending moment resistance **$M_{c,Rd}$** is given by:

$$M_{c,Rd} = W_{pl,y} \cdot f_{yd}$$

$M_{c,Rd}$: *23.13* kN·m

Where:

Class: Section class, depending on its deformation capacity and development of plastic resistance of the flat elements of a section submitted to simple bending. **Class** : *1*

$W_{pl,y}$: Plastic strength modulus corresponding to the fibre with greatest tension, for class 1 and 2 sections. **$W_{pl,y}$** : *88.30* cm³

f_{yd}: Steel design strength. **f_{yd}** : *261.90* MPa

$$f_{yd} = f_y / \gamma_{M0}$$

Where:

f_y: Yield strength. (CTE DB SE-A, Table 4.1) **f_y** : *275.00* MPa

γ_{M0}: Partial safety factor of the material. **γ_{M0}** : *1.05*

Lateral buckling resistance: (CTE DB SE-A, Article 6.3.3.2)

Does not proceed, as the lateral buckling lengths are null.

Z - Axis bending resistance (CTE DB SE-A, Article 6.2.6)

The following criteria must be satisfied:

$$\eta = \frac{M_{Ed}}{M_{c,Rd}} \leq 1$$

η : ***0.044*** ✓

For positive bending:

The worst case design force occurs at node N73, for load combination 0.8·SW+1.5·V4.

M_{Ed}^{+}: Worst case design bending moment. **M_{Ed}^{+}** : *0.01* kN·m

For negative bending:

The worst case design force occurs at node N73, for load combination 1.35·SW+1.05·Q1+1.5·V3+0.75·N1.

M_{Ed}^-: Worst case design bending moment. **M_{Ed}^-** : *0.22* kN·m

The design bending moment resistance **$M_{c,Rd}$** is given by:

$$M_{c,Rd} = W_{pl,z} \cdot f_{yd}$$

$M_{c,Rd}$: *5.05* kN·m

Where:

Class: Section class, depending on its deformation capacity and development of plastic resistance of the flat elements of a section submitted to simple bending. **Class** : *1*

$W_{pl,z}$: Plastic strength modulus corresponding to the fibre with greatest tension, for class 1 and 2 sections. **$W_{pl,z}$** : *19.30* cm³

f_{yd}: Steel design strength. **f_{yd}** : *261.90* MPa

$$f_{yd} = f_y / \gamma_{M0}$$

Where:

f_y: Yield strength. (CTE DB SE-A, Table 4.1) **f_y** : *275.00* MPa

γ_{M0}: Partial safety factor of the material. **γ_{M0}** : *1.05*

Resistance to shear in the Z direction (CTE DB SE-A, Article 6.2.4)

The following criteria must be satisfied:

$$\eta = \frac{V_{Ed}}{V_{c,Rd}} \leq 1$$

η : ***0.011*** ✓

The worst case design force occurs at node N69, for load combination 1.35·SW+0.9·V1+1.5·N1.

V_{Ed}: Worst case design shear force. **V_{Ed}** : *1.21* kN

The shear resistance **$V_{c,Rd}$** is given by:

$$V_{c,Rd} = A_V \cdot \frac{f_{yd}}{\sqrt{3}}$$

$V_{c,Rd}$: *115.17* kN

Where:

A_v: Transverse shear area. **A_v** : *7.62* cm²

$$A_V = h \cdot t_w$$

Where:

h: Depth of the section. **h** : *140.00* mm

t_w: Web thickness. **t_w** : *4.70* mm

f_{yd}: Steel design strength. **f_{yd}** : *261.90* MPa

$$f_{yd} = f_y / \gamma_{M0}$$

Where:

f_y: Yield strength. (CTE DB SE-A, Table 4.1) — f_y : *275.00* MPa

γ_{M0}: Partial safety factor of the material. — γ_{M0} : *1.05*

Shear buckling of the web: (CTE DB SE-A, Article 6.3.3.4)

Even though transverse stiffeners have not been provided, it is not necessary to check the buckling resistance of the web, as the following is verified:

$$\frac{d}{t_w} < 70 \cdot \varepsilon$$

23.87 < **64.71** ✓

Where:

λ_w: Slenderness of the web. — λ_w : *23.87*

$$\lambda_w = \frac{d}{t_w}$$

λ_{max}: Maximum slenderness. — λ_{max} : *64.71*

$$\lambda_{max} = 70 \cdot \varepsilon$$

ε: Reduction factor. — ε : *0.92*

$$\varepsilon = \sqrt{\frac{f_{ref}}{f_y}}$$

Where:

f_{ref}: Reference elastic limit. — f_{ref} : *235.00* MPa

f_y: Yield strength. (CTE DB SE-A, Table 4.1) — f_y : *275.00* MPa

Resistance to shear in the Y direction (CTE DB SE-A, Article 6.2.4)

The following criteria must be satisfied:

$$\eta = \frac{V_{Ed}}{V_{c,Rd}} \leq 1$$

η : ***0.001*** ✓

The worst case design force occurs for load combination 1.35·SW+1.05·Q1+1.5·V3+0.75·N1.

V_{Ed}: Worst case design shear force. — V_{Ed} : *0.12* kN

The shear resistance $V_{c,Rd}$ is given by:

$$V_{c,Rd} = A_V \cdot \frac{f_{yd}}{\sqrt{3}}$$

$V_{c,Rd}$: *158.30* kN

Where:

A_v: Transverse shear area. — A_v : *10.47* cm²

$$A_V = A - d \cdot t_w$$

Where:

A: Area of the gross section. **A** : *16.40* cm²

d: Height of the web. **d** : *126.20* mm

t_w: Web thickness. **t_w** : *4.70* mm

f_{yd}: Steel design strength. **f_{yd}** : *261.90* MPa

$$f_{yd} = f_y / \gamma_{M0}$$

Where:

f_y: Yield strength. (CTE DB SE-A, Table 4.1) **f_y** : *275.00* MPa

γ_{M0}: Partial safety factor of the material. **γ_{M0}** : *1.05*

Combined bending moment Y and shear force Z resistance (CTE DB SE-A, Article 6.2.8)

It is not necessary to reduce the design bending resistance, as the worst case shear force **V_{Ed}** is not greater than 50% of the design shear resistance **$V_{c,Rd}$**.

$$V_{Ed} \leq \frac{V_{c,Rd}}{2}$$

1.21 kN ≤ 57.58 kN ✓

The worst case design forces occur for load combination 1.35·SW+0.9·V1+1.5·N1.

V_{Ed}: Worst case design shear force. **V_{Ed}** : *1.21* kN

$V_{c,Rd}$: Design resistant shear force. **$V_{c,Rd}$** : *115.17* kN

Combined bending moment Z and shear force Y resistance (CTE DB SE-A, Article 6.2.8)

It is not necessary to reduce the design bending resistance, as the worst case shear force **V_{Ed}** is not greater than 50% of the design shear resistance **$V_{c,Rd}$**.

$$V_{Ed} \leq \frac{V_{c,Rd}}{2}$$

0.12 kN ≤ 79.15 kN ✓

The worst case design forces occur for load combination 1.35·SW+1.05·Q1+1.5·V3+0.75·N1.

V_{Ed}: Worst case design shear force. **V_{Ed}** : *0.12* kN

$V_{c,Rd}$: Design resistant shear force. **$V_{c,Rd}$** : *158.30* kN

Combined bending and axial resistance (CTE DB SE-A, Article 6.2.8)

The following criteria must be satisfied:

$$\eta = \frac{N_{c,Ed}}{N_{pl,Rd}} + \frac{M_{y,Ed}}{M_{pl,Rd,y}} + \frac{M_{z,Ed}}{M_{pl,Rd,z}} \leq 1$$

η : ***0.380*** ✓

$$\eta = \frac{N_{c,Ed}}{\chi_y \cdot A \cdot f_{yd}} + k_y \cdot \frac{c_{m,y} \cdot M_{y,Ed}}{\chi_{LT} \cdot W_{pl,y} \cdot f_{yd}} + \alpha_z \cdot k_z \cdot \frac{c_{m,z} \cdot M_{z,Ed}}{W_{pl,z} \cdot f_{yd}} \leq 1$$

η : ***0.366*** ✓

$$\eta = \frac{N_{c,Ed}}{\chi_z \cdot A \cdot f_{yd}} + \alpha_y \cdot k_y \cdot \frac{c_{m,y} \cdot M_{y,Ed}}{W_{pl,y} \cdot f_{yd}} + k_z \cdot \frac{c_{m,z} \cdot M_{z,Ed}}{W_{pl,z} \cdot f_{yd}} \leq 1$$

η : ***0.257*** ✓

The worst case design forces occur at node N73, for load combination 1.35·SW+1.05·Q1+0.9·V3+1.5·N1.

Where:

$N_{c,Ed}$: Worst case design compressive axial force. **$N_{c,Ed}$** : *7.77* kN

$M_{y,Ed}$, $M_{z,Ed}$: Worst case bending moments, in accordance with the Y and Z axes, respectively.
$M_{y,Ed}^+$: *7.42* kN·m
$M_{z,Ed}^-$: *0.21* kN·m

Class: Section class, according to its deformation capacity and plastic resistance development of its flat elements, for axial load and simple bending. **Class** : *1*

$N_{pl,Rd}$: Compressive resistance of the gross section. **$N_{pl,Rd}$** : *429.52* kN

$M_{pl,Rd,y}$, $M_{pl,Rd,z}$: Bending resistance of the gross section in plastic conditions, with respect to the Y and Z axes, respectively.
$M_{pl,Rd,y}$: *23.13* kN·m
$M_{pl,Rd,z}$: *5.05* kN·m

Buckling resistance: (CTE DB SE-A, Article 6.3.4.2)

A: Area of the gross section. **A** : *16.40* cm²

$W_{pl,y}$, $W_{pl,z}$: Plastic resistant modules corresponding to the compressed fibre, about the Y and Z, respectively.
$W_{pl,y}$: *88.30* cm³
$W_{pl,z}$: *19.30* cm³

f_{yd}: Steel design strength. **f_{yd}** : *261.90* MPa

$$f_{yd} = f_y / \gamma_{M1}$$

Where:

f_y: Yield strength. (CTE DB SE-A, Table 4.1) **f_y** : *275.00* MPa

γ_{M1}: Partial safety factor of the material. **γ_{M1}** : *1.05*

k_y, k_z: Interaction coefficients.

$$k_y = 1 + \left(\bar{\lambda}_y - 0.2\right) \cdot \frac{N_{c,Ed}}{\chi_y \cdot N_{c,Rd}}$$

k_y : *1.00*

$$k_z = 1 + \left(2 \cdot \bar{\lambda}_z - 0.6\right) \cdot \frac{N_{c,Ed}}{\chi_z \cdot N_{c,Rd}}$$

k_z : *1.02*

$C_{m,y}$, $C_{m,z}$: Equivalent uniform bending moment factors.

$C_{m,y}$: *1.00*
$C_{m,z}$: *1.00*

χ_y, χ_z: Buckling reduction coefficients, about the Y and Z axes, respectively.

χ_y : *0.96*
χ_z : *0.81*

$\bar{\lambda}_y$, $\bar{\lambda}_z$: Reduced slenderness with values no greater than 1.00, with respect to the Y and Z axes, respectively.

$\bar{\lambda}_y$: *0.38*
$\bar{\lambda}_z$: *0.66*

α_y, α_z: Factors that depend on the class of the section.

α_y : *0.60*
α_z : *0.60*

Combined bending, axial and shear resistance (CTE DB SE-A, Article 6.2.8)

It is not necessary to reduce the design bending and axial force resistance, as the buckling effect can be ignored due to shear. Additionally, the worst case design shear force V_{Ed} is less than or equal to 50% of the design shear resistance $V_{c,Rd}$.

The worst case design forces occur for load combination 1.35·SW+0.9·V1+1.5·N1.

$$V_{Ed,z} \leq \frac{V_{c,Rd,z}}{2}$$

1.21 kN ≤ 57.58 kN ✓

Where:

$V_{Ed,z}$: Worst case design shear force. — $V_{Ed,z}$: *1.21* kN

$V_{c,Rd,z}$: Design resistant shear force. — $V_{c,Rd,z}$: *115.17* kN

Torsional resistance (CTE DB SE-A, Article 6.2.7)

The following criteria must be satisfied:

$$\eta = \frac{M_{T,Ed}}{M_{T,Rd}} \leq 1$$

η : ***0.004*** ✓

The worst case design force occurs for load combination 0.8·SW+1.5·V3.

$M_{T,Ed}$: Worst case design torsional moment. — $M_{T,Ed}$: *0.00* kN·m

The design torsional moment resistance $M_{T,Rd}$ is given by:

$M_{T,Rd}$: *0.54* kN·m

$$\mathbf{M_{T,Rd}} = \frac{1}{\sqrt{3}} \cdot W_T \cdot f_{yd}$$

Where:

W_T: Torsion resistance module. **W_T** : *3.55* cm³

f_{yd}: Steel design strength. **f_{yd}** : *261.90* MPa

$$\mathbf{f_{yd}} = f_y / \gamma_{M0}$$

Where:

f_y: Yield strength. (CTE DB SE-A, Table 4.1) **f_y** : *275.00* MPa

γ_{M0}: Partial safety factor of the material. **γ_{M0}** : *1.05*

Combined Z shear and torsional resistance (CTE DB SE-A, Article 6.2.8)

The following criteria must be satisfied:

$$\eta = \frac{V_{Ed}}{V_{pl,T,Rd}} \leq 1$$

η : ***0.009*** ✓

The worst case design forces occur at node N69, for load combination 1.35·SW+0.9·V3+1.5·N1.

V_{Ed}: Worst case design shear force. **V_{Ed}** : *1.09* kN

$M_{T,Ed}$: Worst case design torsional moment. **$M_{T,Ed}$** : *0.00* kN·m

The reduced design resistant shear force **$V_{pl,T,Rd}$** is given by:

$$\mathbf{V_{pl,T,Rd}} = \sqrt{1 - \frac{\tau_{T,Ed}}{1.25 \cdot f_{yd}/\sqrt{3}}} \cdot V_{pl,Rd}$$

$V_{pl,T,Rd}$: *115.05* kN

Where:

$V_{pl,Rd}$: Design resistant shear force. **$V_{pl,Rd}$** : *115.17* kN

$\tau_{T,Ed}$: Tangential stresses due to torsion. **$\tau_{T,Ed}$** : *0.39* MPa

$$\mathbf{\tau_{T,Ed}} = \frac{M_{T,Ed}}{W_t}$$

Where:

W_T: Torsion resistance module. **W_T** : *3.55* cm³

f_{yd}: Steel design strength. **f_{yd}** : *261.90* MPa

$$\mathbf{f_{yd}} = f_y / \gamma_{M0}$$

Where:

f_y: Yield strength. (CTE DB SE-A, Table 4.1) **f_y** : *275.00* MPa

γ_{M0}: Partial safety factor of the material. **γ_{M0}** : *1.05*

Combined Y shear and torsional resistance (CTE DB SE-A, Article 6.2.8)

The following criteria must be satisfied:

$$\eta = \frac{V_{Ed}}{V_{pl,T,Rd}} \leq 1$$

η : **0.001** ✓

The worst case design forces occur for load combination 1.35·SW+1.05·Q1+1.5·V3+0.75·N1.

V_{Ed}: Worst case design shear force. **V_{Ed}** : *0.12* kN

$M_{T,Ed}$: Worst case design torsional moment. **$M_{T,Ed}$** : *0.00* kN·m

The reduced design resistant shear force **$V_{pl,T,Rd}$** is given by:

$$V_{pl,T,Rd} = \sqrt{1 - \frac{\tau_{T,Ed}}{1.25 \cdot f_{yd}/\sqrt{3}}} \cdot V_{pl,Rd}$$

$V_{pl,T,Rd}$: *158.03* kN

Where:

$V_{pl,Rd}$: Design resistant shear force. **$V_{pl,Rd}$** : *158.30* kN

$\tau_{T,Ed}$: Tangential stresses due to torsion. **$\tau_{T,Ed}$** : *0.65* MPa

$$\tau_{T,Ed} = \frac{M_{T,Ed}}{W_t}$$

Where:

W_T: Torsion resistance module. **W_T** : *3.55* cm³

f_{yd}: Steel design strength. **f_{yd}** : *261.90* MPa

$$f_{yd} = f_y / \gamma_{M0}$$

Where:

f_y: Yield strength. (CTE DB SE-A, Table 4.1) **f_y** : *275.00* MPa

γ_{M0}: Partial safety factor of the material. **γ_{M0}** : *1.05*

2.6 Section 6

Section: IPE 160
Material: Steel (S275)

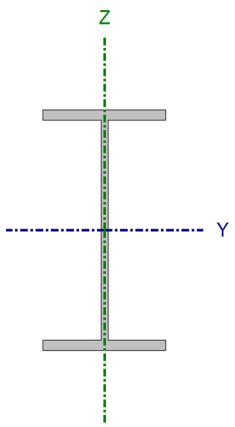

Nodes		Length (m)	Mechanical characteristics			
Initial	Final		Area (cm²)	I_y(1) (cm4)	I_z(1) (cm4)	I_t(2) (cm4)
N61	N62	3.150	20.10	869.00	68.30	3.60

Notes:
(1) Inertia with respect to the indicated axis
(2) Uniform torsional moment of inertia

	Buckling		Lateral buckling	
	XY plane	XZ plane	Top fl.	Bot. fl.
β	0.50	1.00	0.00	0.00
L_K	1.575	3.150	0.000	0.000
C_m	1.000	1.000	1.000	1.000
C_1	-		1.000	

Notation:
β: Buckling coefficient
L_K: Buckling length (m)
C_m: Moment coefficient
C_1: Critical moment modification factor

Bar	CHECKS (CTE DB SE-A)															Status
	$\bar{\lambda}$	λ_w	N_t	N_c	M_Y	M_Z	V_Z	V_Y	M_YV_Z	M_ZV_Y	NM_YM_Z	$NM_YM_ZV_YV_Z$	M_t	M_tV_Z	M_tV_Y	
N61/N62	$\bar{\lambda}$ < 2.0 Verified	x: 0.197 m $\lambda_w \leq \lambda_{w,max}$ Verified	η = 0.3	η = 1.6	x: 1.575 m η = 71.6	M_{Ed} = 0.00 D.N.P.(1)	x: 0 m η = 20.2	V_{Ed} = 0.00 D.N.P.(2)	x: 0.197 m η < 0.1	D.N.P.(3)	x: 1.575 m η = 72.7	x: 0.197 m η < 0.1	M_{Ed} = 0.00 D.N.P.(4)	D.N.P.(5)	D.N.P.(5)	**VERIFIED η = 72.7**

Notation:
$\bar{\lambda}$: Slenderness limit
λ_w: Crushing of the web induced by the compressed flange
N_t: Resistance to axial tension
N_c: Compression resistance
M_Y: Y - Axis bending resistance
M_Z: Z - Axis bending resistance
V_Z: Resistance to shear in the Z direction
V_Y: Resistance to shear in the Y direction
M_YV_Z: Combined bending moment Y and shear force Z resistance
M_ZV_Y: Combined bending moment Z and shear force Y resistance
NM_YM_Z: Combined bending and axial resistance
$NM_YM_ZV_YV_Z$: Combined bending, axial and shear resistance
M_t: Torsional resistance
M_tV_Z: Combined Z shear and torsional resistance
M_tV_Y: Combined Y shear and torsional resistance
x: Distance to the origin of the bar
η: Usage coefficient (%)
D.N.P.: Not applicable

Checks that do not proceed (D.N.P.):
(1) The check does not proceed, as there is no bending moment.
(2) The check does not proceed, as there is no shear force.
(3) The check does not proceed, as there is no interaction between shear forces and bending moments for any loadcase combination.
(4) The check does not proceed, as there is no torsional moment.
(5) There is no interaction between torsional moment and shear force for any combination. Therefore the check does not proceed.

Slenderness limit (CTE DB SE-A, Articles 6.3.1 and 6.3.2.1 - Table 6.3)

The reduced slenderness $\bar{\lambda}$ of the bars in compression must be less than 2.0.

$$\bar{\lambda} = \sqrt{\frac{A \cdot f_y}{N_{cr}}}$$

$\bar{\lambda}$: ***0.98*** ✓

Where:

Class: Section class, depending on its deformation capacity and development of plastic resistance of the compressed elements of a section. **Class** : *1*

A: Area of the gross section for class 1, 2 and 3 sections. **A** : *20.10* cm²

f_y: Yield strength. (CTE DB SE-A, Table 4.1) **f_y** : *275.00* MPa

N_{cr}: Critical elastic buckling axial force. **N_{cr}** : *570.66* kN

The critical elastic buckling axial force **N_{cr}** is the smallest of the following values a), b) and c):

a) Critical elastic buckling axial force with respect to the Y axis. **$N_{cr,y}$** : *1815.17* kN

$$N_{cr,y} = \frac{\pi^2 \cdot E \cdot I_y}{L_{ky}^2}$$

b) Critical elastic buckling axial force with respect to the Z axis. **$N_{cr,z}$** : *570.66* kN

$$N_{cr,z} = \frac{\pi^2 \cdot E \cdot I_z}{L_{kz}^2}$$

c) Critical elastic buckling axial force due to torsion. **$N_{cr,T}$** : ∞

$$N_{cr,T} = \frac{1}{i_0^2} \cdot \left[G \cdot I_t + \frac{\pi^2 \cdot E \cdot I_w}{L_{kt}^2} \right]$$

Where:

I_y: Moment of inertia of the gross section, with respect to the Y-axis. **I_y** : *869.00* cm4

I_z: Moment of inertia of the gross section, with respect to the Z-axis. **I_z** : *68.30* cm4

I_t: Uniform torsional moment of inertia. **I_t** : *3.60* cm4

I_w: Section warping constant. **I_w** : *3960.00* cm6

E: Modulus of Elasticity. **E** : *210000* MPa

G: Elastic modulus of steel. **G** : *81000* MPa

L_{ky}: Effective buckling length due to bending, with respect to the Y axis. **L_{ky}** : *3.150* m

L_{kz}: Effective buckling length due to bending, with respect to the Z axis. **L_{kz}** : *1.575* m

L_{kt}: Effective buckling length due to torsion. **L_{kt}** : *0.000* m

i_0: Polar radius of gyration of the gross section, with respect to the centre of torsion. **i_0** : *6.83* cm

$$i_0 = \left(i_y^2 + i_z^2 + y_0^2 + z_0^2\right)^{0.5}$$

Where:

i_y , i_z: Radii of gyration of the gross section, with respect to the main axes of inertia Y and Z. **i_y** : *6.58* cm **i_z** : *1.84* cm

y_0 , z_0: Coordinates of the torsional centre in the direction of the main axes Y and Z, respectively, relative to the centre of gravity of the section. **y_0** : *0.00* mm **z_0** : *0.00* mm

Crushing of the web induced by the compressed flange (CYPE criteria, based on: Eurocode 3 EN 1993-1-5: 2006, Article 8)

The following criteria must be satisfied:

$$\frac{h_w}{t_w} \leq k \frac{E}{f_{yf}} \sqrt{\frac{A_w}{A_{fc,ef}}}$$

29.04 ≤ 250.58 ✓

Where:

h_w: Height of the web.	h_w :	145.20	mm
t_w: Web thickness.	t_w :	5.00	mm
A_w: Area of the web.	A_w :	7.26	cm²
$A_{fc,ef}$: Reduced area of the compressed flange.	$A_{fc,ef}$:	6.07	cm²
k: Coefficient which depends on the class of the section.	k :	0.30	
E: Modulus of Elasticity.	E :	210000	MPa
f_{yf}: Steel elastic limit of the compressed flange.	f_{yf} :	275.00	MPa

Where:

$$f_{yf} = f_y$$

Resistance to axial tension (CTE DB SE-A, Article 6.2.3)

The following criteria must be satisfied:

$$\eta = \frac{N_{t,Ed}}{N_{t,Rd}} \leq 1$$

η : ***0.003*** ✓

The worst case design force occurs for load combination 0.8·SW+1.5·V4+0.75·N1.

$N_{t,Ed}$: Worst case design axial tensile force. — $N_{t,Ed}$: 1.62 kN

The design tensile resistance $N_{t,Rd}$ is given by:

$$N_{t,Rd} = A \cdot f_{yd}$$

$N_{t,Rd}$: 526.43 kN

Where:

A: Gross transverse section of the bar.	A :	20.10	cm²
f_{yd}: Steel design strength.	f_{yd} :	261.90	MPa

$$f_{yd} = f_y / \gamma_{M0}$$

Where:

f_y: Yield strength. (CTE DB SE-A, Table 4.1)	f_y :	275.00	MPa
γ_{M0}: Partial safety factor of the material.	γ_{M0} :	1.05	

Compression resistance (CTE DB SE-A, Article 6.2.5)

The following criteria must be satisfied:

$$\eta = \frac{N_{c,Ed}}{N_{c,Rd}} \leq 1$$

η : **0.010** ✓

$$\eta = \frac{N_{c,Ed}}{N_{b,Rd}} \leq 1$$

η : **0.016** ✓

The worst case design force occurs for load combination 1.35·SW+1.05·Q1+1.5·V3.

$N_{c,Ed}$: Worst case design compressive axial force. **$N_{c,Ed}$** : *5.03* kN

The normal design compression force **$N_{c,Rd}$** should be taken as:

$$N_{c,Rd} = A \cdot f_{yd}$$

$N_{c,Rd}$: *526.43* kN

Where:

Class: Section class, depending on its deformation capacity and development of plastic resistance of the compressed elements of a section. **Class** : *1*

A: Area of the gross section for class 1, 2 and 3 sections. **A** : *20.10* cm²

f_{yd}: Steel design strength. **f_{yd}** : *261.90* MPa

$$f_{yd} = f_y / \gamma_{M0}$$

Where:

f_y: Yield strength. (CTE DB SE-A, Table 4.1) **f_y** : *275.00* MPa

γ_{M0}: Partial safety factor of the material. **γ_{M0}** : *1.05*

Buckling resistance: (CTE DB SE-A, Article 6.3.2)

The design buckling resistance **$N_{b,Rd}$** of a compressed bar is given by:

$$N_{b,Rd} = \chi \cdot A \cdot f_{yd}$$

$N_{b,Rd}$: *319.59* kN

Where:

A: Area of the gross section for class 1, 2 and 3 sections. **A** : *20.10* cm²

f_{yd}: Steel design strength. **f_{yd}** : *261.90* MPa

$$f_{yd} = f_y / \gamma_{M1}$$

Where:

f_y: Yield strength. (CTE DB SE-A, Table 4.1) **f_y** : *275.00* MPa

γ_{M1}: Partial safety factor of the material. **γ_{M1}** : *1.05*

χ: Reduction coefficient due to buckling.

$$\chi = \frac{1}{\Phi + \sqrt{\Phi^2 - \left(\bar{\lambda}\right)^2}} \leq 1$$

χ_y : *0.91*

χ_z : *0.61*

Where:

ϕ_y : *0.69*

$$\Phi = 0.5 \cdot \left[1 + \alpha \cdot \left(\bar{\lambda} - 0.2\right) + \left(\bar{\lambda}\right)^2\right]$$

ϕ_z : 1.12

α: Elastic imperfection coefficient.

α_y : 0.21
α_z : 0.34

$\bar{\lambda}$: Reduced slenderness.

$$\bar{\lambda} = \sqrt{\frac{A \cdot f_y}{N_{cr}}}$$

$\bar{\lambda}_y$: 0.55
$\bar{\lambda}_z$: 0.98

N_{cr}: Critical elastic buckling axial force, obtained from the smallest of the following values:

N_{cr} : 570.66 kN

$N_{cr,y}$: Critical elastic buckling axial force with respect to the Y axis.

$N_{cr,y}$: 1815.17 kN

$N_{cr,z}$: Critical elastic buckling axial force with respect to the Z axis.

$N_{cr,z}$: 570.66 kN

$N_{cr,T}$: Critical elastic buckling axial force due to torsion.

$N_{cr,T}$: ∞

Y - Axis bending resistance (CTE DB SE-A, Article 6.2.6)

The following criteria must be satisfied:

$$\eta = \frac{M_{Ed}}{M_{c,Rd}} \leq 1$$

η : **0.716** ✓

For positive bending:

The worst case design force occurs at a point situated at a distance of 1.575 m from node N61, for load combination 1.35·SW+1.5·Q1.

M_{Ed}^+: Worst case design bending moment.

M_{Ed}^+ : 23.25 kN·m

For negative bending:

M_{Ed}^-: Worst case design bending moment.

M_{Ed}^- : 0.00 kN·m

The design bending moment resistance **$M_{c,Rd}$** is given by:

$$M_{c,Rd} = W_{pl,y} \cdot f_{yd}$$

$M_{c,Rd}$: 32.48 kN·m

Where:

Class: Section class, depending on its deformation capacity and development of plastic resistance of the flat elements of a section submitted to simple bending.

Class : 1

$W_{pl,y}$: Plastic strength modulus corresponding to the fibre with greatest tension, for class 1 and 2 sections.

$W_{pl,y}$: 124.00 cm³

f_{yd}: Steel design strength.

f_{yd} : 261.90 MPa

$$f_{yd} = f_y / \gamma_{M0}$$

Where:

f_y: Yield strength. (CTE DB SE-A, Table 4.1)

f_y : 275.00 MPa

γ_{M0}: Partial safety factor of the material.

γ_{M0} : 1.05

Lateral buckling resistance: (CTE DB SE-A, Article 6.3.3.2)
Does not proceed, as the lateral buckling lengths are null.

Z - Axis bending resistance (CTE DB SE-A, Article 6.2.6)
The check does not proceed, as there is no bending moment.

Resistance to shear in the Z direction (CTE DB SE-A, Article 6.2.4)
The following criteria must be satisfied:

$$\eta = \frac{V_{Ed}}{V_{c,Rd}} \leq 1$$

η : ***0.202*** ✓

The worst case design force occurs at node N61, for load combination 1.35·SW+1.5·Q1.

$\mathbf{V_{Ed}}$: Worst case design shear force. $\mathbf{V_{Ed}}$: *29.52* kN

The shear resistance $\mathbf{V_{c,Rd}}$ is given by:

$$\mathbf{V_{c,Rd}} = A_V \cdot \frac{f_{yd}}{\sqrt{3}}$$

$\mathbf{V_{c,Rd}}$: *146.16* kN

Where:

$\mathbf{A_v}$: Transverse shear area. $\mathbf{A_v}$: *9.67* cm²

$$\mathbf{A_v} = h \cdot t_w$$

Where:

h: Depth of the section. **h** : *160.00* mm

$\mathbf{t_w}$: Web thickness. $\mathbf{t_w}$: *5.00* mm

$\mathbf{f_{yd}}$: Steel design strength. $\mathbf{f_{yd}}$: *261.90* MPa

$$\mathbf{f_{yd}} = f_y / \gamma_{M0}$$

Where:

$\mathbf{f_y}$: Yield strength. (CTE DB SE-A, Table 4.1) $\mathbf{f_y}$: *275.00* MPa

γ_{M0}: Partial safety factor of the material. γ_{M0} : *1.05*

Shear buckling of the web: (CTE DB SE-A, Article 6.3.3.4)
Even though transverse stiffeners have not been provided, it is not necessary to check the buckling resistance of the web, as the following is verified:

$$\frac{\mathbf{d}}{\mathbf{t_w}} < 70 \cdot \varepsilon$$

25.44 < **64.71** ✓

Where:

λ_w: Slenderness of the web. λ_w : *25.44*

$$\lambda_w = \frac{d}{t_w}$$

λ_{max}: Maximum slenderness. λ_{max} : *64.71*

$$\lambda_{max} = 70 \cdot \varepsilon$$

ε: Reduction factor. ε : *0.92*

$$\varepsilon = \sqrt{\frac{f_{ref}}{f_y}}$$

Where:

f_{ref}: Reference elastic limit. f_{ref} : *235.00* MPa

f_y: Yield strength. (CTE DB SE-A, Table 4.1) f_y : *275.00* MPa

Resistance to shear in the Y direction (CTE DB SE-A, Article 6.2.4)

The check does not proceed, as there is no shear force.

Combined bending moment Y and shear force Z resistance (CTE DB SE-A, Article 6.2.8)

It is not necessary to reduce the design bending resistance, as the worst case shear force V_{Ed} is not greater than 50% of the design shear resistance $V_{c,Rd}$.

$$V_{Ed} \leq \frac{V_{c,Rd}}{2}$$ **25.83 kN ≤ 73.08 kN** ✓

The worst case design forces occur at a point situated at a distance of 0.197 m from node N61, for load combination 1.35·SW+1.5·Q1.

V_{Ed}: Worst case design shear force. V_{Ed} : *25.83* kN

$V_{c,Rd}$: Design resistant shear force. $V_{c,Rd}$: *146.16* kN

Combined bending moment Z and shear force Y resistance (CTE DB SE-A, Article 6.2.8)

The check does not proceed, as there is no interaction between shear forces and bending moments for any loadcase combination.

Combined bending and axial resistance (CTE DB SE-A, Article 6.2.8)

The following criteria must be satisfied:

$$\eta = \frac{N_{c,Ed}}{N_{pl,Rd}} + \frac{M_{y,Ed}}{M_{pl,Rd,y}} + \frac{M_{z,Ed}}{M_{pl,Rd,z}} \leq 1$$

η : ***0.724*** ✓

$$\eta = \frac{N_{c,Ed}}{\chi_y \cdot A \cdot f_{yd}} + k_y \cdot \frac{c_{m,y} \cdot M_{y,Ed}}{\chi_{LT} \cdot W_{pl,y} \cdot f_{yd}} + \alpha_z \cdot k_z \cdot \frac{c_{m,z} \cdot M_{z,Ed}}{W_{pl,z} \cdot f_{yd}} \leq 1$$

η : ***0.727*** ✓

$$\eta = \frac{N_{c,Ed}}{\chi_z \cdot A \cdot f_{yd}} + \alpha_y \cdot k_y \cdot \frac{c_{m,y} \cdot M_{y,Ed}}{W_{pl,y} \cdot f_{yd}} + k_z \cdot \frac{c_{m,z} \cdot M_{z,Ed}}{W_{pl,z} \cdot f_{yd}} \leq 1$$

η : ***0.444*** ✓

The worst case design forces occur at a point situated at a distance of 1.575 m from node N61, for load combination 1.35·SW+1.5·Q1+0.9·V3.

Where:

$N_{c,Ed}$: Worst case design compressive axial force. — $N_{c,Ed}$: *4.24* kN

$M_{y,Ed}$, $M_{z,Ed}$: Worst case bending moments, in accordance with the Y and Z axes, respectively. — $M_{y,Ed}^+$: *23.25* kN·m; $M_{z,Ed}^+$: *0.00* kN·m

Class: Section class, according to its deformation capacity and plastic resistance development of its flat elements, for axial load and simple bending. — **Class** : *1*

$N_{pl,Rd}$: Compressive resistance of the gross section. — $N_{pl,Rd}$: *526.43* kN

$M_{pl,Rd,y}$, $M_{pl,Rd,z}$: Bending resistance of the gross section in plastic conditions, with respect to the Y and Z axes, respectively. — $M_{pl,Rd,y}$: *32.48* kN·m; $M_{pl,Rd,z}$: *6.84* kN·m

Buckling resistance: (CTE DB SE-A, Article 6.3.4.2)

A: Area of the gross section. — **A** : *20.10* cm²

$W_{pl,y}$, $W_{pl,z}$: Plastic resistant modules corresponding to the compressed fibre, about the Y and Z, respectively. — $W_{pl,y}$: *124.00* cm³; $W_{pl,z}$: *26.10* cm³

f_{yd}: Steel design strength. — f_{yd} : *261.90* MPa

$$f_{yd} = f_y / \gamma_{M1}$$

Where:

f_y: Yield strength. (CTE DB SE-A, Table 4.1) — f_y : *275.00* MPa

γ_{M1}: Partial safety factor of the material. — γ_{M1} : *1.05*

k_y, k_z: Interaction coefficients.

$$k_y = 1 + \left(\bar{\lambda}_y - 0.2\right) \cdot \frac{N_{c,Ed}}{\chi_y \cdot N_{c,Rd}}$$

k_y : *1.00*

$$k_z = 1 + \left(2 \cdot \bar{\lambda}_z - 0.6\right) \cdot \frac{N_{c,Ed}}{\chi_z \cdot N_{c,Rd}}$$

k_z : *1.02*

$C_{m,y}$, $C_{m,z}$: Equivalent uniform bending moment factors. — $C_{m,y}$: *1.00*; $C_{m,z}$: *1.00*

χ_y, χ_z: Buckling reduction coefficients, about the Y and Z axes, respectively.

χ_y : *0.91*
χ_z : *0.61*

$\bar{\lambda}_y$, $\bar{\lambda}_z$: Reduced slenderness with values no greater than 1.00, with respect to the Y and Z axes, respectively.

$\bar{\lambda}_y$: *0.55*
$\bar{\lambda}_z$: *0.98*

α_y, α_z: Factors that depend on the class of the section.

α_y : *0.60*
α_z : *0.60*

Combined bending, axial and shear resistance (CTE DB SE-A, Article 6.2.8)

It is not necessary to reduce the design bending and axial force resistance, as the buckling effect can be ignored due to shear. Additionally, the worst case design shear force $\mathbf{V_{Ed}}$ is less than or equal to 50% of the design shear resistance $\mathbf{V_{c,Rd}}$.

The worst case design forces occur at a point situated at a distance of 0.197 m from node N61, for load combination 1.35·SW+1.5·Q1.

$$\mathbf{V_{Ed,z}} \leq \frac{V_{c,Rd,z}}{2}$$

25.83 kN ≤ 73.08 kN ✓

Where:

$\mathbf{V_{Ed,z}}$: Worst case design shear force. $\mathbf{V_{Ed,z}}$: *25.83* kN

$\mathbf{V_{c,Rd,z}}$: Design resistant shear force. $\mathbf{V_{c,Rd,z}}$: *146.16* kN

2.7 Section 7

Section: SHS 80x4.0
Material: Steel (S275)

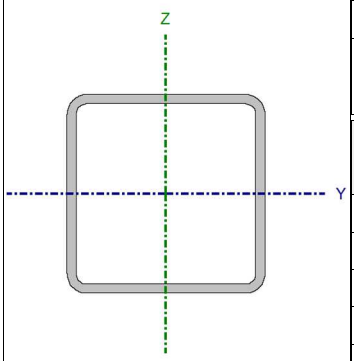

Nodes		Length (m)	Mechanical characteristics			
Initial	Final		Area (cm²)	I_y(1) (cm4)	I_z(1) (cm4)	I_t(2) (cm4)
N54	N53	2.000	11.74	110.63	110.63	180.25

Notes:
(1) Inertia with respect to the indicated axis
(2) Uniform torsional moment of inertia

	Buckling		Lateral buckling	
	XY plane	XZ plane	Top fl.	Bot. fl.
β	0.50	1.00	0.00	0.00
L_K	1.000	2.000	0.000	0.000
C_m	1.000	1.000	1.000	1.000
C_1	-		1.000	

Notation:
β: Buckling coefficient
L_K: Buckling length (m)
C_m: Moment coefficient
C_1: Critical moment modification factor

Bar	CHECKS (CTE DB SE-A)															Status
	$\bar{\lambda}$	λ_w	N_t	N_c	M_Y	M_Z	V_Z	V_Y	M_YV_Z	M_ZV_Y	NM_YM_Z	$NM_YM_ZV_YV_Z$	M_t	M_tV_Z	M_tV_Y	
N54/N53	$\bar{\lambda} \leq 3.0$ Verified	$\lambda_w \leq \lambda_{w,max}$ Verified	η = 2.8	N_{Ed} = 0.00 D.N.P.(1)	x: 0.424 m η = 10.8	x: 1.96 m η = 9.1	x: 1.96 m η = 0.5	η = 0.8	η < 0.1	η < 0.1	x: 1.96 m η = 20.4	η < 0.1	η = 0.9	x: 1.96 m η = 0.5	η = 0.8	**VERIFIED η = 20.4**

Notation:
$\bar{\lambda}$: Slenderness limit
λ_w: Crushing of the web induced by the compressed flange
N_t: Resistance to axial tension
N_c: Compression resistance
M_Y: Y - Axis bending resistance
M_Z: Z - Axis bending resistance
V_Z: Resistance to shear in the Z direction
V_Y: Resistance to shear in the Y direction
M_YV_Z: Combined bending moment Y and shear force Z resistance
M_ZV_Y: Combined bending moment Z and shear force Y resistance
NM_YM_Z: Combined bending and axial resistance
$NM_YM_ZV_YV_Z$: Combined bending, axial and shear resistance
M_t: Torsional resistance
M_tV_Z: Combined Z shear and torsional resistance
M_tV_Y: Combined Y shear and torsional resistance
x: Distance to the origin of the bar
η: Usage coefficient (%)
D.N.P.: Not applicable

Checks that do not proceed (D.N.P.):
(1) The check does not proceed, as there is no compressive axial force.

Slenderness limit (CTE DB SE-A, Articles 6.3.1 and 6.3.2.1 - Table 6.3)

The reduced slenderness value, $\bar{\lambda}$, of the bars in tension must not exceed 3.0.

$$\bar{\lambda} = \sqrt{\frac{A \cdot f_y}{N_{cr}}}$$

$\bar{\lambda}$: ***0.75*** ✓

Where:

A: Gross transverse section of the bar. **A** : *11.74* cm²

f_y: Yield strength. (CTE DB SE-A, Table 4.1) **f_y** : *275.00* MPa

N_{cr}: Critical elastic buckling axial force. **N_{cr}** : *573.23* kN

The critical elastic buckling axial force **N_{cr}** is the smallest of the following values a), b) and c):

a) Critical elastic buckling axial force with respect to the Y axis. **$N_{cr,y}$** : *573.23* kN

$$N_{cr,y} = \frac{\pi^2 \cdot E \cdot I_y}{L_{ky}^2}$$

b) Critical elastic buckling axial force with respect to the Z axis. **$N_{cr,z}$** : *2292.94* kN

$$N_{cr,z} = \frac{\pi^2 \cdot E \cdot I_z}{L_{kz}^2}$$

c) Critical elastic buckling axial force due to torsion. **$N_{cr,T}$** : ∞

$$N_{cr,T} = \frac{1}{i_0^2} \cdot \left[G \cdot I_t + \frac{\pi^2 \cdot E \cdot I_w}{L_{kt}^2} \right]$$

Where:

I_y: Moment of inertia of the gross section, with respect to the Y-axis. **I_y** : *110.63* cm4

I_z: Moment of inertia of the gross section, with respect to the Z-axis. **I_z** : *110.63* cm4

I_t: Uniform torsional moment of inertia. **I_t** : *180.25* cm4

I_w: Section warping constant. **I_w** : *0.00* cm6

E: Modulus of Elasticity. **E** : *210000* MPa

G: Elastic modulus of steel. **G** : *81000* MPa

L_{ky}: Effective buckling length due to bending, with respect to the Y axis. **L_{ky}** : *2.000* m

L_{kz}: Effective buckling length due to bending, with respect to the Z axis. **L_{kz}** : *1.000* m

L_{kt}: Effective buckling length due to torsion. **L_{kt}** : *0.000* m

i_0: Polar radius of gyration of the gross section, with respect to the centre of torsion. **i_0** : *4.34* cm

$$i_0 = \left(i_y^2 + i_z^2 + y_0^2 + z_0^2 \right)^{0.5}$$

Where:

i_y , i_z: Radii of gyration of the gross section, with respect to the main axes of inertia Y and Z. **i_y** : *3.07* cm **i_z** : *3.07* cm

y_0 , z_0: Coordinates of the torsional centre in the direction of the main axes Y and Z, respectively, relative to the centre of gravity of the section. **y_0** : *0.00* mm **z_0** : *0.00* mm

<u>Crushing of the web induced by the compressed flange</u> (CYPE criteria, based on: Eurocode 3 EN 1993-1-5: 2006, Article 8)

The following criteria must be satisfied:

$$\frac{h_w}{t_w} \leq k \frac{E}{f_{yf}} \sqrt{\frac{A_w}{A_{fc,ef}}}$$

18.00 ≤ 307.36 ✓

Where:

h_w: Height of the web.	**h_w** :	*72.00*	mm
t_w: Web thickness.	**t_w** :	*4.00*	mm
A_w: Area of the web.	**A_w** :	*5.76*	cm²
$A_{fc,ef}$: Reduced area of the compressed flange.	**$A_{fc,ef}$** :	*3.20*	cm²
k: Coefficient which depends on the class of the section.	**k** :	*0.30*	
E: Modulus of Elasticity.	**E** :	*210000*	MPa
f_{yf}: Steel elastic limit of the compressed flange.	**f_{yf}** :	*275.00*	MPa

Where:

$$f_{yf} = f_y$$

Resistance to axial tension (CTE DB SE-A, Article 6.2.3)

The following criteria must be satisfied:

$$\eta = \frac{N_{t,Ed}}{N_{t,Rd}} \leq 1$$

η : ***0.028*** ✓

The worst case design force occurs for load combination 1.35·SW+1.05·Q1+0.9·V3+1.5·N1.

$N_{t,Ed}$: Worst case design axial tensile force. **$N_{t,Ed}$** : *8.58* kN

The design tensile resistance **$N_{t,Rd}$** is given by:

$$N_{t,Rd} = A \cdot f_{yd}$$

$N_{t,Rd}$: *307.43* kN

Where:

A: Gross transverse section of the bar. **A** : *11.74* cm²

f_{yd}: Steel design strength. **f_{yd}** : *261.90* MPa

$$f_{yd} = f_y / \gamma_{M0}$$

Where:

f_y: Yield strength. (CTE DB SE-A, Table 4.1) **f_y** : *275.00* MPa

γ_{M0}: Partial safety factor of the material. **γ_{M0}** : *1.05*

Compression resistance (CTE DB SE-A, Article 6.2.5)

The check does not proceed, as there is no compressive axial force.

Y - Axis bending resistance (CTE DB SE-A, Article 6.2.6)

The following criteria must be satisfied:

$$\eta = \frac{M_{Ed}}{M_{c,Rd}} \leq 1$$

η : **0.108** ✓

For positive bending:

The worst case design force occurs at a point situated at a distance of 0.424 m from node N54, for load combination 1.35·SW+1.05·Q1+0.9·V2+1.5·N1.

M_{Ed}^+: Worst case design bending moment. **M_{Ed}^+** : *0.93* kN·m

For negative bending:

M_{Ed}^-: Worst case design bending moment. **M_{Ed}^-** : *0.00* kN·m

The design bending moment resistance **$M_{c,Rd}$** is given by:

$$M_{c,Rd} = W_{pl,y} \cdot f_{yd}$$

$M_{c,Rd}$: *8.64* kN·m

Where:

Class: Section class, depending on its deformation capacity and development of plastic resistance of the flat elements of a section submitted to simple bending. **Class** : *1*

$W_{pl,y}$: Plastic strength modulus corresponding to the fibre with greatest tension, for class 1 and 2 sections. **$W_{pl,y}$** : *33.01* cm³

f_{yd}: Steel design strength. **f_{yd}** : *261.90* MPa

$$f_{yd} = f_y / \gamma_{M0}$$

Where:

f_y: Yield strength. (CTE DB SE-A, Table 4.1) **f_y** : *275.00* MPa

γ_{M0}: Partial safety factor of the material. **γ_{M0}** : *1.05*

Z - Axis bending resistance (CTE DB SE-A, Article 6.2.6)

The following criteria must be satisfied:

$$\eta = \frac{M_{Ed}}{M_{c,Rd}} \leq 1$$

η : **0.091** ✓

For positive bending:

M_{Ed}^+: Worst case design bending moment. **M_{Ed}^+** : *0.00* kN·m

For negative bending:

The worst case design force occurs at a point situated at a distance of 1.960 m from node N54, for load combination 1.35·SW+1.05·Q1+0.9·V4+1.5·N1.

M_{Ed}^-: Worst case design bending moment. **M_{Ed}^-** : *0.79* kN·m

The design bending moment resistance **$M_{c,Rd}$** is given by:

$$M_{c,Rd} = W_{pl,z} \cdot f_{yd}$$

$M_{c,Rd}$: *8.64* kN·m

Where:

Class: Section class, depending on its deformation capacity and development of plastic resistance of the flat elements of a section submitted to simple bending. **Class** : *1*

$\mathbf{W_{pl,z}}$: Plastic strength modulus corresponding to the fibre with greatest tension, for class 1 and 2 sections. $\mathbf{W_{pl,z}}$: *33.01* cm³

$\mathbf{f_{yd}}$: Steel design strength. $\mathbf{f_{yd}}$: *261.90* MPa

$$\mathbf{f_{yd}} = f_y / \gamma_{M0}$$

Where:

$\mathbf{f_y}$: Yield strength. (CTE DB SE-A, Table 4.1) $\mathbf{f_y}$: *275.00* MPa

γ_{M0}: Partial safety factor of the material. γ_{M0} : *1.05*

Resistance to shear in the Z direction (CTE DB SE-A, Article 6.2.4)

The following criteria must be satisfied:

$$\eta = \frac{V_{Ed}}{V_{c,Rd}} \leq 1$$

η : ***0.005*** ✓

The worst case design force occurs at a point situated at a distance of 1.960 m from node N54, for load combination 1.35·SW+1.05·Q1+1.5·V2+0.75·N1.

$\mathbf{V_{Ed}}$: Worst case design shear force. $\mathbf{V_{Ed}}$: *0.44* kN

The shear resistance $\mathbf{V_{c,Rd}}$ is given by:

$$\mathbf{V_{c,Rd}} = A_V \cdot \frac{f_{yd}}{\sqrt{3}}$$

$\mathbf{V_{c,Rd}}$: *87.10* kN

Where:

$\mathbf{A_v}$: Transverse shear area. $\mathbf{A_v}$: *5.76* cm²

$$\mathbf{A_V} = 2 \cdot d \cdot t_w$$

Where:

d: Height of the web. **d** : *72.00* mm

$\mathbf{t_w}$: Web thickness. $\mathbf{t_w}$: *4.00* mm

$\mathbf{f_{yd}}$: Steel design strength. $\mathbf{f_{yd}}$: *261.90* MPa

$$\mathbf{f_{yd}} = f_y / \gamma_{M0}$$

Where:

$\mathbf{f_y}$: Yield strength. (CTE DB SE-A, Table 4.1) $\mathbf{f_y}$: *275.00* MPa

γ_{M0}: Partial safety factor of the material. γ_{M0} : *1.05*

Shear buckling of the web: (CTE DB SE-A, Article 6.3.3.4)

Even though transverse stiffeners have not been provided, it is not necessary to check the buckling resistance of the web, as the following is verified:

$$\frac{d}{t_w} < 70 \cdot \varepsilon$$

18.00 < **64.71** ✓

Where:

λ_w: Slenderness of the web. λ_w : *18.00*

$$\lambda_w = \frac{d}{t_w}$$

λ_{max}: Maximum slenderness. λ_{max} : *64.71*

$$\lambda_{max} = 70 \cdot \varepsilon$$

ε: Reduction factor. ε : *0.92*

$$\varepsilon = \sqrt{\frac{f_{ref}}{f_y}}$$

Where:

f_{ref}: Reference elastic limit. f_{ref} : *235.00* MPa

f_y: Yield strength. (CTE DB SE-A, Table 4.1) f_y : *275.00* MPa

Resistance to shear in the Y direction (CTE DB SE-A, Article 6.2.4)

The following criteria must be satisfied:

$$\eta = \frac{V_{Ed}}{V_{c,Rd}} \leq 1$$

η : ***0.008*** ✓

The worst case design force occurs for load combination 1.35·SW+1.05·Q1+0.9·V4+1.5·N1.

V_{Ed}: Worst case design shear force. V_{Ed} : *0.73* kN

The shear resistance $V_{c,Rd}$ is given by:

$$V_{c,Rd} = A_V \cdot \frac{f_{yd}}{\sqrt{3}}$$

$V_{c,Rd}$: *90.40* kN

Where:

A_v: Transverse shear area. A_v : *5.98* cm²

$$A_V = A - 2 \cdot d \cdot t_w$$

Where:

A: Area of the gross section. A : *11.74* cm²

d: Height of the web. d : *72.00* mm

t_w: Web thickness. t_w : *4.00* mm

$\mathbf{f_{yd}}$: Steel design strength. $\mathbf{f_{yd}}$: *261.90* MPa

$$\mathbf{f_{yd}} = f_y / \gamma_{M0}$$

Where:

$\mathbf{f_y}$: Yield strength. (CTE DB SE-A, Table 4.1) $\mathbf{f_y}$: *275.00* MPa

γ_{M0}: Partial safety factor of the material. γ_{M0} : *1.05*

Shear buckling of the web: (CTE DB SE-A, Article 6.3.3.4)

Even though transverse stiffeners have not been provided, it is not necessary to check the buckling resistance of the web, as the following is verified:

$$\frac{\mathbf{b}}{\mathbf{t_f}} < 70 \cdot \varepsilon \qquad \mathbf{20.00} < \mathbf{64.71} \checkmark$$

Where:

λ_w: Slenderness of the web. λ_w : *20.00*

$$\lambda_w = \frac{b}{t_f}$$

λ_{max}: Maximum slenderness. λ_{max} : *64.71*

$$\lambda_{max} = 70 \cdot \varepsilon$$

ε: Reduction factor. ε : *0.92*

$$\varepsilon = \sqrt{\frac{f_{ref}}{f_y}}$$

Where:

$\mathbf{f_{ref}}$: Reference elastic limit. $\mathbf{f_{ref}}$: *235.00* MPa

$\mathbf{f_y}$: Yield strength. (CTE DB SE-A, Table 4.1) $\mathbf{f_y}$: *275.00* MPa

Combined bending moment Y and shear force Z resistance (CTE DB SE-A, Article 6.2.8)

It is not necessary to reduce the design bending resistance, as the worst case shear force $\mathbf{V_{Ed}}$ is not greater than 50% of the design shear resistance $\mathbf{V_{c,Rd}}$.

$$\mathbf{V_{Ed}} \leq \frac{\mathbf{V_{c,Rd}}}{2} \qquad \mathbf{0.34\ kN} \leq \mathbf{43.55\ kN} \checkmark$$

The worst case design forces occur for load combination 1.35·SW+0.9·V1+1.5·N1.

$\mathbf{V_{Ed}}$: Worst case design shear force. $\mathbf{V_{Ed}}$: *0.34* kN

$\mathbf{V_{c,Rd}}$: Design resistant shear force. $\mathbf{V_{c,Rd}}$: *87.10* kN

Combined bending moment Z and shear force Y resistance (CTE DB SE-A, Article 6.2.8)

It is not necessary to reduce the design bending resistance, as the worst case shear force $\mathbf{V_{Ed}}$ is not greater than 50% of the design shear resistance $\mathbf{V_{c,Rd}}$.

$$V_{Ed} \leq \frac{V_{c,Rd}}{2}$$

0.73 kN ≤ 45.20 kN ✓

The worst case design forces occur for load combination 1.35·SW+1.05·Q1+0.9·V4+1.5·N1.

$\mathbf{V_{Ed}}$: Worst case design shear force. $\mathbf{V_{Ed}}$: *0.73* kN

$\mathbf{V_{c,Rd}}$: Design resistant shear force. $\mathbf{V_{c,Rd}}$: *90.40* kN

Combined bending and axial resistance (CTE DB SE-A, Article 6.2.8)

The following criteria must be satisfied:

$$\eta = \frac{N_{t,Ed}}{N_{pl,Rd}} + \frac{M_{y,Ed}}{M_{pl,Rd,y}} + \frac{M_{z,Ed}}{M_{pl,Rd,z}} \leq 1$$

η : ***0.204*** ✓

$$\eta = \frac{M_{ef,Ed}}{M_{b,Rd,y}} + \frac{M_{z,Ed}}{M_{pl,Rd,z}} \leq 1$$

η : ***0.158*** ✓

The worst case design forces occur at a point situated at a distance of 1.960 m from node N54, for load combination 1.35·SW+1.05·Q1+0.9·V1+1.5·N1.

Where:

$\mathbf{N_{t,Ed}}$: Worst case design axial tensile force. $\mathbf{N_{t,Ed}}$: *7.86* kN

$\mathbf{M_{y,Ed}}$, $\mathbf{M_{z,Ed}}$: Worst case bending moments, in accordance with the Y and Z axes, respectively. $\mathbf{M_{y,Ed}^{+}}$: *0.81* kN·m; $\mathbf{M_{z,Ed}^{-}}$: *0.73* kN·m

Class: Section class, according to its deformation capacity and plastic resistance development of its flat elements, for axial load and simple bending. **Class** : *1*

$\mathbf{N_{pl,Rd}}$: Resistance to axial tension. $\mathbf{N_{pl,Rd}}$: *307.43* kN

$\mathbf{M_{pl,Rd,y}}$, $\mathbf{M_{pl,Rd,z}}$: Bending resistance of the gross section in plastic conditions, with respect to the Y and Z axes, respectively. $\mathbf{M_{pl,Rd,y}}$: *8.64* kN·m; $\mathbf{M_{pl,Rd,z}}$: *8.64* kN·m

Buckling resistance: (CTE DB SE-A, Article 6.3.4.1)

$\mathbf{M_{ef,Ed}}$: Worst case design bending moment. $\mathbf{M_{ef,Ed}}$: *0.64* kN·m

$$M_{ef,Ed} = W_{y,com} \cdot \sigma_{com,Ed}$$

Where:

$\sigma_{com,Ed}$: Combined tension at the compressed end fibre. $\sigma_{com,Ed}$: *19.29* MPa

$$\sigma_{com,Ed} = \frac{M_{y,Ed}}{W_{y,com}} - 0.8 \cdot \frac{N_{t,Ed}}{A}$$

$W_{y,com}$: Section resistance module referred to the outermost compressed fibre about the Y axis. $W_{y,com}$: *33.01* cm³

A: Area of the gross section. **A** : *11.74* cm²

$M_{b,Rd,y}$: Design bending moment resistance. $M_{b,Rd,y}$: *8.64* kN·m

Combined bending, axial and shear resistance (CTE DB SE-A, Article 6.2.8)

It is not necessary to reduce the design bending and axial force resistance, as the buckling effect can be ignored due to shear. Additionally, the worst case design shear force V_{Ed} is less than or equal to 50% of the design shear resistance $V_{c,Rd}$.

The worst case design forces occur for load combination 1.35·SW+1.05·Q1+0.9·V4+1.5·N1.

$$V_{Ed,y} \leq \frac{V_{c,Rd,y}}{2}$$

0.73 kN ≤ 44.80 kN ✓

Where:

$V_{Ed,y}$: Worst case design shear force. $V_{Ed,y}$: *0.73* kN

$V_{c,Rd,y}$: Design resistant shear force. $V_{c,Rd,y}$: *89.59* kN

Torsional resistance (CTE DB SE-A, Article 6.2.7)

The following criteria must be satisfied:

$$\eta = \frac{M_{T,Ed}}{M_{T,Rd}} \leq 1$$

η : ***0.009*** ✓

The worst case design force occurs for load combination 1.35·SW+0.9·V4+1.5·N1.

$M_{T,Ed}$: Worst case design torsional moment. $M_{T,Ed}$: *0.06* kN·m

The design torsional moment resistance $M_{T,Rd}$ is given by:

$$M_{T,Rd} = \frac{1}{\sqrt{3}} \cdot W_T \cdot f_{yd}$$

$M_{T,Rd}$: *6.99* kN·m

Where:

W_T: Torsion resistance module. W_T : *46.21* cm³

f_{yd}: Steel design strength. f_{yd} : *261.90* MPa

$$f_{yd} = f_y / \gamma_{M0}$$

Where:

f_y: Yield strength. (CTE DB SE-A, Table 4.1) — f_y : *275.00* MPa

γ_{M0}: Partial safety factor of the material. — γ_{M0} : *1.05*

Combined Z shear and torsional resistance (CTE DB SE-A, Article 6.2.8)

The following criteria must be satisfied:

$$\eta = \frac{V_{Ed}}{V_{pl,T,Rd}} \leq 1$$

η : ***0.005*** ✓

The worst case design forces occur at a point situated at a distance of 1.960 m from node N54, for load combination 1.35·SW+1.05·Q1+1.5·V2+0.75·N1.

V_{Ed}: Worst case design shear force. — V_{Ed} : *0.44* kN

$M_{T,Ed}$: Worst case design torsional moment. — $M_{T,Ed}$: *0.05* kN·m

The reduced design resistant shear force $V_{pl,T,Rd}$ is given by:

$$V_{pl,T,Rd} = \left[1 - \frac{\tau_{T,Ed}}{f_{yd}/\sqrt{3}}\right] \cdot V_{pl,Rd}$$

$V_{pl,T,Rd}$: *86.45* kN

Where:

$V_{pl,Rd}$: Design resistant shear force. — $V_{pl,Rd}$: *87.10* kN

$\tau_{T,Ed}$: Tangential stresses due to torsion. — $\tau_{T,Ed}$: *1.12* MPa

$$\tau_{T,Ed} = \frac{M_{T,Ed}}{W_t}$$

Where:

W_T: Torsion resistance module. — W_T : *46.21* cm³

f_{yd}: Steel design strength. — f_{yd} : *261.90* MPa

$$f_{yd} = f_y / \gamma_{M0}$$

Where:

f_y: Yield strength. (CTE DB SE-A, Table 4.1) — f_y : *275.00* MPa

γ_{M0}: Partial safety factor of the material. — γ_{M0} : *1.05*

Combined Y shear and torsional resistance (CTE DB SE-A, Article 6.2.8)

The following criteria must be satisfied:

$$\eta = \frac{V_{Ed}}{V_{pl,T,Rd}} \leq 1$$

η : ***0.008*** ✓

The worst case design forces occur for load combination 1.35·SW+1.05·Q1+0.9·V4+1.5·N1.

V_{Ed}: Worst case design shear force. **V_{Ed}** : *0.73* kN

$M_{T,Ed}$: Worst case design torsional moment. **$M_{T,Ed}$** : *0.06* kN·m

The reduced design resistant shear force **$V_{pl,T,Rd}$** is given by:

$$V_{pl,T,Rd} = \left[1 - \frac{\tau_{T,Ed}}{f_{yd}/\sqrt{3}}\right] \cdot V_{pl,Rd}$$

$V_{pl,T,Rd}$: *89.59* kN

Where:

$V_{pl,Rd}$: Design resistant shear force. **$V_{pl,Rd}$** : *90.40* kN

$\tau_{T,Ed}$: Tangential stresses due to torsion. **$\tau_{T,Ed}$** : *1.34* MPa

$$\tau_{T,Ed} = \frac{M_{T,Ed}}{W_t}$$

Where:

W_T: Torsion resistance module. **W_T** : *46.21* cm³

f_{yd}: Steel design strength. **f_{yd}** : *261.90* MPa

$$f_{yd} = f_y / \gamma_{M0}$$

Where:

f_y: Yield strength. (CTE DB SE-A, Table 4.1) **f_y** : *275.00* MPa

γ_{M0}: Partial safety factor of the material. **γ_{M0}** : *1.05*